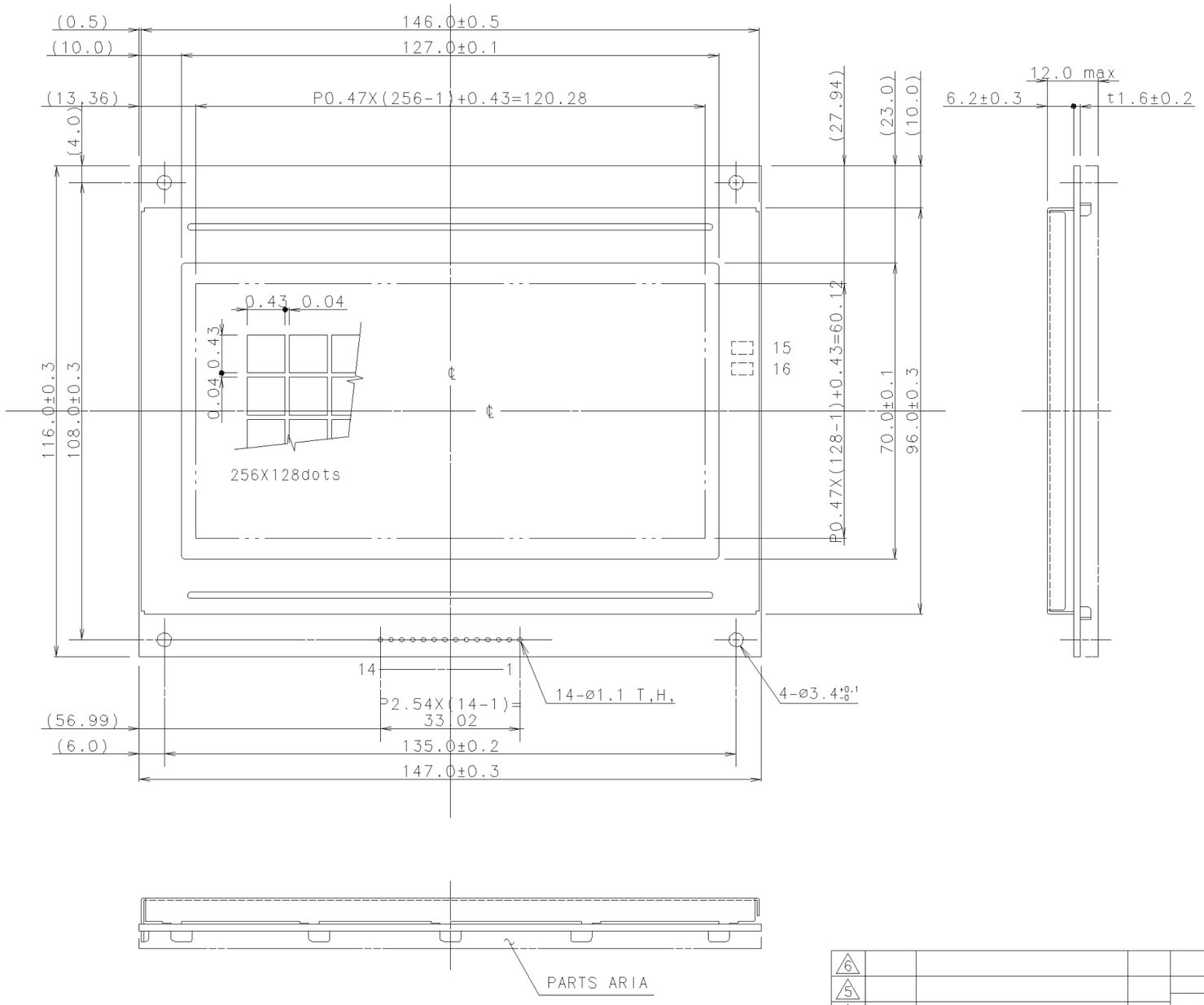

PIN ASSIGNMENT

PIN NO	SYMBOL
1	VDD
2	Vss
3	VEE
4	LP
5	M
6	DISP OFF
7	NC
8	FLM
9	CP
10	NC
11	D0
12	D1
13	D2
14	D3
15	EL
16	EL

TOLERANCE				
MEASURE	A	B	C	
l≤16	±0.1	±0.3	±1	
16<l≤63	±0.2	±0.5	±1.5	
63<l≤250	±0.3	±0.8	±2	
250<l≤500	±0.5	±1.2	±3	ANGLE
500<l≤1000	±0.8	±2	±4	±30' (±1°) ±2°

ISSUE	DATE	REVISIONS	NAME
6			
5			
4			
3			
2			
1			

OPTREX CORPORATION

MATERIAL	FINISH	Q'ty	NOTE
3rd ANGLE PROJECTION	TOLERANCE CLASS: B	SCALE: 1:1	
APPROVED	MODEL DMF682A-EL Series		
CHECKED	TITLE DIMENSIONAL OUTLINE		
DRAWN JAN06'-9.3 Y.Hara	CODE		
DESIGNED JAN07'-8.8 M.Shibamoto	DRAWING No. UE 34760		