FEATURES

- **Complete PWM Power-Control Circuitry**
- **Uncommitted Outputs for 200-mA Sink or Source Current**
- **Output Control Selects Single-Ended or Push-Pull Operation**
- **Internal Circuitry Prohibits Double Pulse at Either Output**
- **Variable Dead Time Provides Control Over Total Range**
- **Internal Regulator Provides a Stable 5-V Reference Supply With 5% Tolerance**
- **Circuit Architecture Allows Easy Synchronization**

D, DB, N, NS, OR PW PACKAGE
(TOP VIEW)

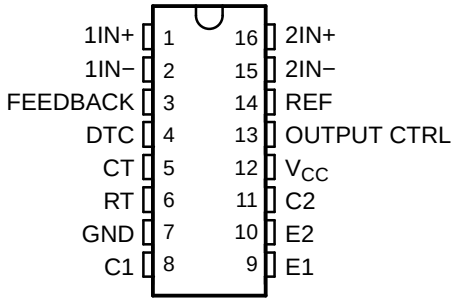

DESCRIPTION

The TL494 incorporates all the functions required in the construction of a pulse-width-modulation (PWM) control circuit on a single chip. Designed primarily for power-supply control, this device offers the flexibility to tailor the power-supply control circuitry to a specific application.

The TL494 contains two error amplifiers, an on-chip adjustable oscillator, a dead-time control (DTC) comparator, a pulse-steering control flip-flop, a 5-V, 5%-precision regulator, and output-control circuits.

The error amplifiers exhibit a common-mode voltage range from –0.3 V to V_{CC} – 2 V. The dead-time control comparator has a fixed offset that provides approximately 5% dead time. The on-chip oscillator can be bypassed by terminating RT to the reference output and providing a sawtooth input to CT, or it can drive the common circuits in synchronous multiple-rail power supplies.

The uncommitted output transistors provide either common-emitter or emitter-follower output capability. The TL494 provides for push-pull or single-ended output operation, which can be selected through the output-control function. The architecture of this device prohibits the possibility of either output being pulsed twice during push-pull operation.

The TL494C is characterized for operation from 0°C to 70°C. The TL494I is characterized for operation from –40°C to 85°C.

AVAILABLE OPTIONS

T_A	PACKAGED DEVICES(1)				
	SMALL OUTLINE (D)	PLASTIC DIP (N)	SMALL OUTLINE (NS)	SHRINK SMALL OUTLINE (DB)	THIN SHRINK SMALL OUTLINE (PW)
0°C to 70°C	TL494CD	TL494CN	TL494CNS	TL494CDB	TL494CPW
–40°C to 85°C	TL494ID	TL494IN	—	—	—

(1) The D, DB, NS, and PW packages are available taped and reeled. Add the suffix R to device type (e.g., TL494CDR).

Please be aware that an important notice concerning availability, standard warranty, and use in critical applications of Texas Instruments semiconductor products and disclaimers thereto appears at the end of this data sheet.

PRODUCTION DATA information is current as of publication date. Products conform to specifications per the terms of the Texas Instruments standard warranty. Production processing does not necessarily include testing of all parameters.

Copyright © 1983–2005, Texas Instruments Incorporated

FUNCTION TABLE

INPUT TO OUTPUT CTRL	OUTPUT FUNCTION
V_I = GND	Single-ended or parallel output
$V_I = V_{ref}$	Normal push-pull operation

FUNCTIONAL BLOCK DIAGRAM

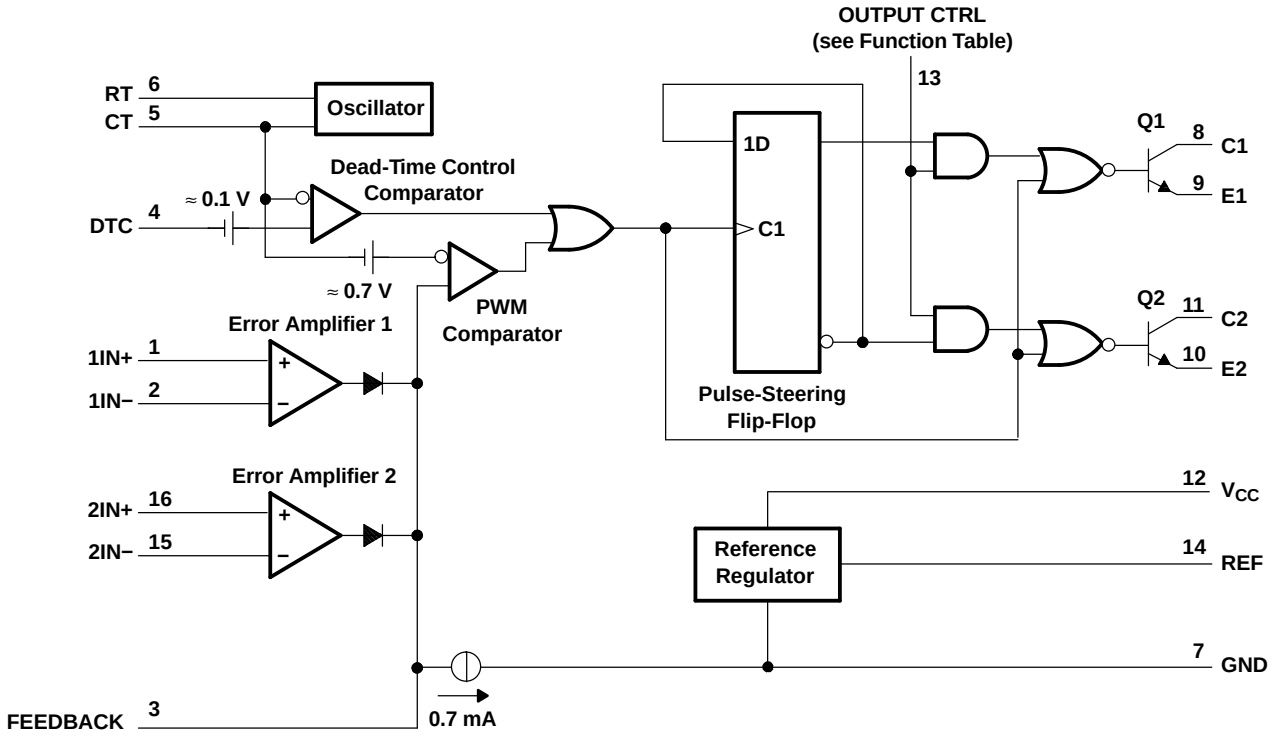

Absolute Maximum Ratings[1]

over operating free-air temperature range (unless otherwise noted)

			MIN	MAX	UNIT
V_{CC}	Supply voltage[2]			41	V
V_I	Amplifier input voltage			V_{CC} + 0.3	V
V_O	Collector output voltage			41	V
I_O	Collector output current			250	mA
θ_{JA}	Package thermal impedance[3][4]	D package		73	°C/W
		DB package		82	
		N package		67	
		NS package		64	
		PW package		108	
	Lead temperature 1,6 mm (1/16 inch) from case for 10 seconds			260	°C
T_{stg}	Storage temperature range		–65	150	°C

(1) Stresses beyond those listed under "absolute maximum ratings" may cause permanent damage to the device. These are stress ratings only, and functional operation of the device at these or any other conditions beyond those indicated under "recommended operating conditions" is not implied. Exposure to absolute-maximum-rated conditions for extended periods may affect device reliability.
(2) All voltages are with respect to the network ground terminal.
(3) Maximum power disipation is a function of $T_J(max)$, θ_{JA}, and T_A. The maximum allowable power dissipation at any allowable ambient temperatire is $P_D = (T_J(max) – T_A)/\theta_{JA}$. Operating at the absolute maximum T_J of 150°C can affect reliability.
(4) The package thermal impedance is calculated in accordance with JESD 51-7.

Recommended Operating Conditions

			MIN	MAX	UNIT
V_{CC}	Supply voltage		7	40	V
V_I	Amplifier input voltage		–0.3	V_{CC} – 2	V
V_O	Collector output voltage			40	V
	Collector output current (each transistor)			200	mA
	Current into feedback terminal			0.3	mA
f_{OSC}	Oscillator frequency		1	300	kHz
C_T	Timing capacitor		0.47	10000	nF
R_T	Timing resistor		1.8	500	kΩ
T_A	Operating free-air temperature	TL494C	0	70	°C
		TL494I	–40	85	

Electrical Characteristics

over recommended operating free-air temperature range, V_{CC} = 15 V, f = 10 kHz (unless otherwise noted)

Reference Section

PARAMETER	TEST CONDITIONS(1)	TL494C, TL494I			UNIT
		MIN	TYP(2)	MAX	
Output voltage (REF)	I_O = 1 mA	4.75	5	5.25	V
Input regulation	V_{CC} = 7 V to 40 V		2	25	mV
Output regulation	I_O = 1 mA to 10 mA		1	15	mV
Output voltage change with temperature	ΔT_A = MIN to MAX		2	10	mV/V
Short-circuit output current(3)	REF = 0 V		25		mA

(1) For conditions shown as MIN or MAX, use the appropriate value specified under recommended operating conditions.
(2) All typical values, except for parameter changes with temperature, are at T_A = 25°C.
(3) Duration of short circuit should not exceed one second.

Oscillator Section

C_T = 0.01 μF, R_T = 12 kΩ (see Figure 1)

PARAMETER	TEST CONDITIONS(1)	TL494C, TL494I			UNIT
		MIN	TYP(2)	MAX	
Frequency			10		kHz
Standard deviation of frequency(3)	All values of V_{CC}, C_T, R_T, and T_A constant		100		Hz/kHz
Frequency change with voltage	V_{CC} = 7 V to 40 V, T_A = 25°C		1		Hz/kHz
Frequency change with temperature(4)	ΔT_A = MIN to MAX			10	Hz/kHz

(1) For conditions shown as MIN or MAX, use the appropriate value specified under recommended operating conditions.
(2) All typical values, except for parameter changes with temperature, are at T_A = 25°C.
(3) Standard deviation is a measure of the statistical distribution about the mean as derived from the formula:

$$\sigma = \sqrt{\frac{\sum_{n=1}^{N} (x_n - \overline{X})^2}{N - 1}}$$

(4) Temperature coefficient of timing capacitor and timing resistor are not taken into account.

Error-Amplifier Section

See Figure 2

PARAMETER	TEST CONDITIONS	TL494C, TL494I			UNIT
		MIN	TYP(1)	MAX	
Input offset voltage	V_O (FEEDBACK) = 2.5 V		2	10	mV
Input offset current	V_O (FEEDBACK) = 2.5 V		25	250	nA
Input bias current	V_O (FEEDBACK) = 2.5 V		0.2	1	μA
Common-mode input voltage range	V_{CC} = 7 V to 40 V	–0.3 to V_{CC} – 2			V
Open-loop voltage amplification	ΔV_O = 3 V, V_O = 0.5 V to 3.5 V, R_L = 2 kΩ	70	95		dB
Unity-gain bandwidth	V_O = 0.5 V to 3.5 V, R_L = 2 kΩ		800		kHz
Common-mode rejection ratio	ΔV_O = 40 V, T_A = 25°C	65	80		dB
Output sink current (FEEDBACK)	V_{ID} = –15 mV to –5 V, V (FEEDBACK) = 0.7 V	0.3	0.7		mA
Output source current (FEEDBACK)	V_{ID} = 15 mV to 5 V, V (FEEDBACK) = 3.5 V	–2			mA

(1) All typical values, except for parameter changes with temperature, are at T_A = 25°C.

Electrical Characteristics

over recommended operating free-air temperature range, V_{CC} = 15 V, f = 10 kHz (unless otherwise noted)

Output Section

PARAMETER		TEST CONDITIONS	MIN	TYP(1)	MAX	UNIT
Collector off-state current		V_{CE} = 40 V, V_{CC} = 40 V		2	100	µA
Emitter off-state current		V_{CC} = V_C = 40 V, V_E = 0			–100	µA
Collector-emitter saturation voltage	Common emitter	V_E = 0, I_C = 200 mA		1.1	1.3	V
	Emitter follower	$V_{O(C1 \text{ or } C2)}$ = 15 V, I_E = –200 mA		1.5	2.5	
Output control input current		V_I = V_{ref}			3.5	mA

(1) All typical values, except for temperature coefficient, are at T_A = 25°C.

Dead-Time Control Section

See Figure 1

PARAMETER	TEST CONDITIONS	MIN	TYP(1)	MAX	UNIT
Input bias current (DEAD-TIME CTRL)	V_I = 0 to 5.25 V		–2	–10	µA
Maximum duty cycle, each output	V_I (DEAD-TIME CTRL) = 0, C_T = 0.01 µF, R_T = 12 kΩ		45		%
Input threshold voltage (DEAD-TIME CTRL)	Zero duty cycle		3	3.3	V
	Maximum duty cycle	0			

(1) All typical values, except for temperature coefficient, are at T_A = 25°C.

PWM Comparator Section

See Figure 1

PARAMETER	TEST CONDITIONS	MIN	TYP(1)	MAX	UNIT
Input threshold voltage (FEEDBACK)	Zero duty cyle		4	4.5	V
Input sink current (FEEDBACK)	V (FEEDBACK) = 0.7 V	0.3	0.7		mA

(1) All typical values, except for temperature coefficient, are at T_A = 25°C.

Total Device

PARAMETER	TEST CONDITIONS		MIN	TYP(1)	MAX	UNIT
Standby supply current	R_T = V_{ref}, All other inputs and outputs open	V_{CC} = 15 V		6	10	mA
		V_{CC} = 40 V		9	15	
Average supply current	V_I (DEAD-TIME CTRL) = 2 V, See Figure 1			7.5		mA

(1) All typical values, except for temperature coefficient, are at T_A = 25°C.

Switching Characteristics

T_A = 25°C

PARAMETER	TEST CONDITIONS	MIN	TYP(1)	MAX	UNIT
Rise time	Common-emitter configuration, See Figure 3		100	200	ns
Fall time			25	100	ns
Rise time	Emitter-follower configuration, See Figure 4		100	200	ns
Fall time			40	100	ns

(1) All typical values, except for temperature coefficient, are at T_A = 25°C.

PARAMETER MEASUREMENT INFORMATION

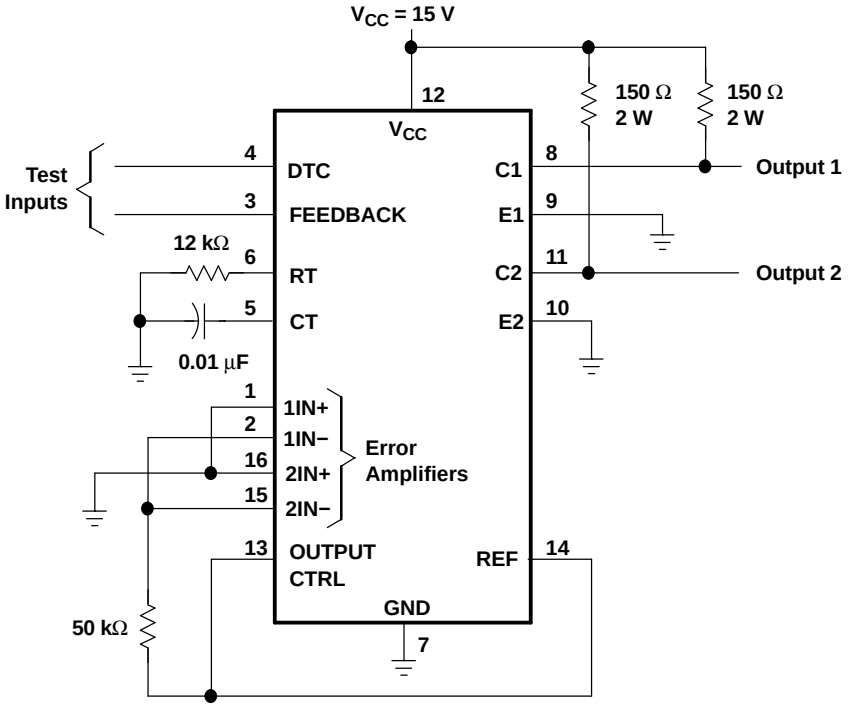

TEST CIRCUIT

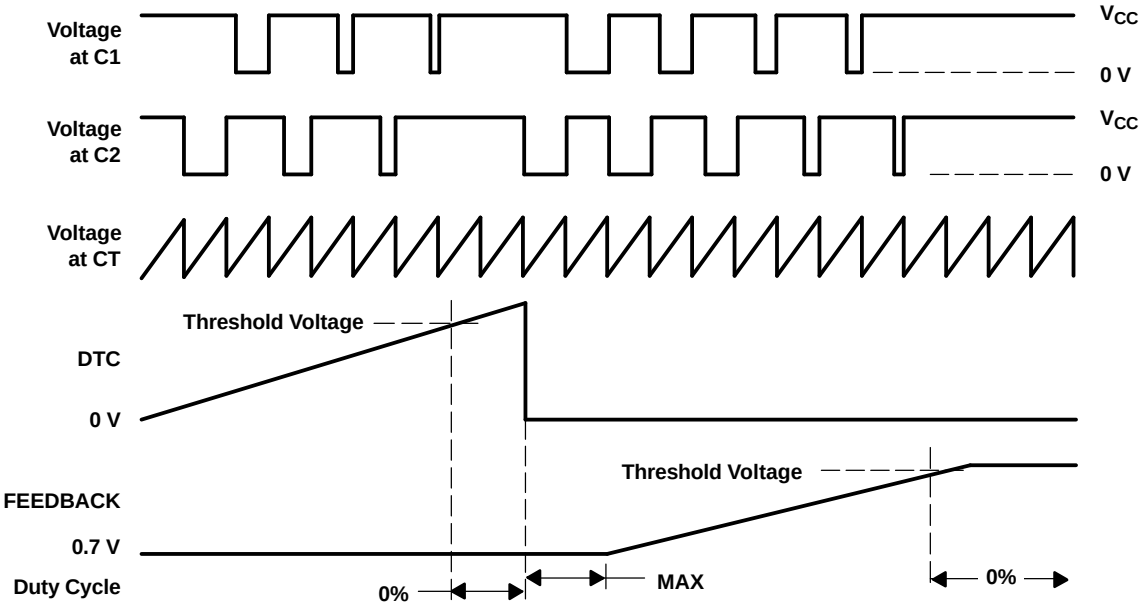

VOLTAGE WAVEFORMS

Figure 1. Operational Test Circuit and Waveforms

PARAMETER MEASUREMENT INFORMATION

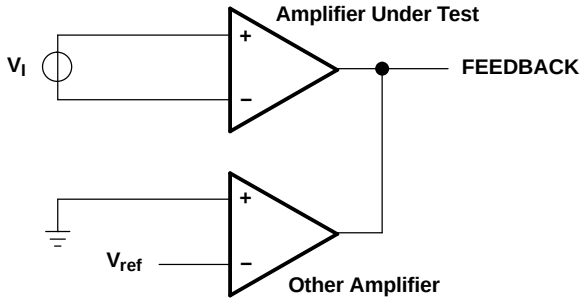

Figure 2. Amplifier Characteristics

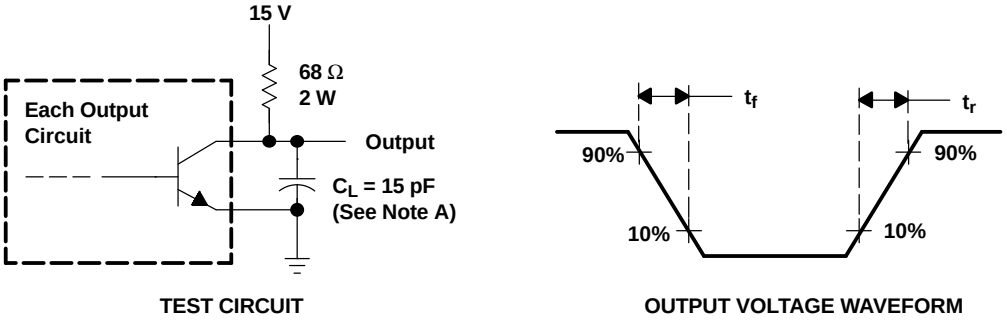

NOTE A: C_L includes probe and jig capacitance.

Figure 3. Common-Emitter Configuration

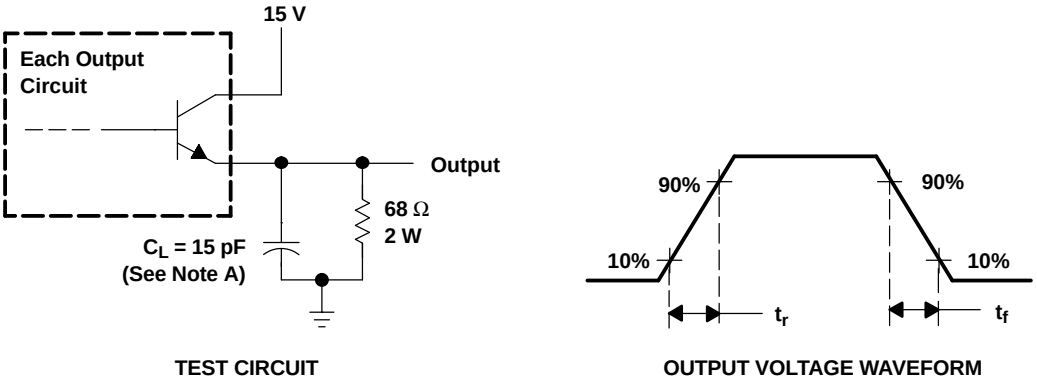

NOTE A: C_L includes probe and jig capacitance.

Figure 4. Emitter-Follower Configuration

TYPICAL CHARACTERISTICS

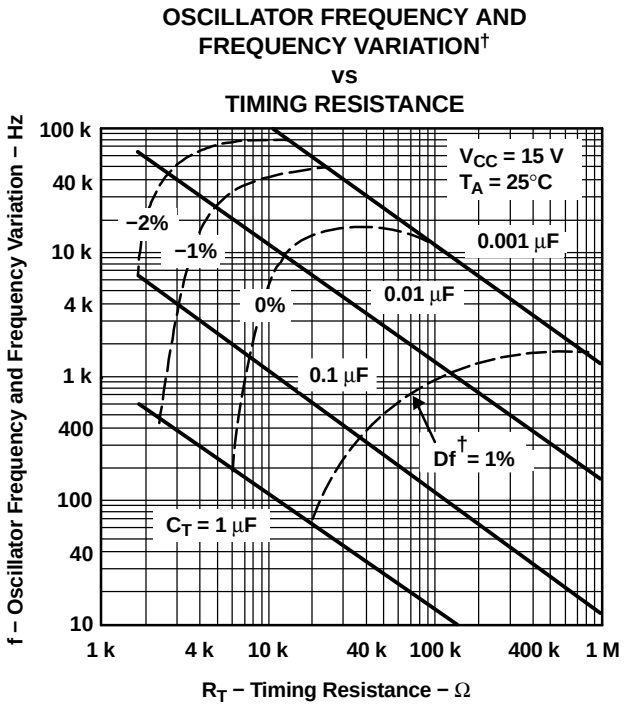

† Frequency variation (Δf) is the change in oscillator frequency that occurs over the full temperature range.

Figure 5.

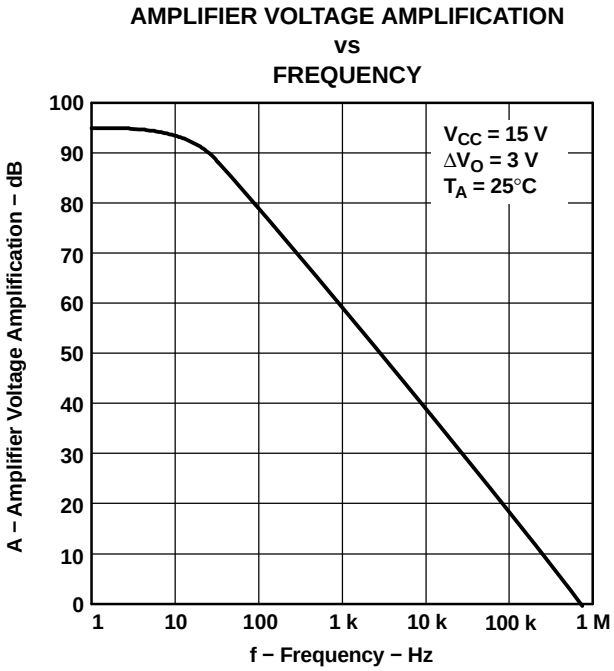

Figure 6.

PACKAGING INFORMATION

Orderable Device	Status (1)	Package Type	Package Drawing	Pins	Package Qty	Eco Plan (2)	Lead/Ball Finish	MSL Peak Temp (3)
TL494CD	ACTIVE	SOIC	D	16	40	Green (RoHS & no Sb/Br)	CU NIPDAU	Level-1-260C-UNLIM
TL494CDBR	ACTIVE	SSOP	DB	16	2000	Green (RoHS & no Sb/Br)	CU NIPDAU	Level-1-260C-UNLIM
TL494CDBRE4	ACTIVE	SSOP	DB	16	2000	Green (RoHS & no Sb/Br)	CU NIPDAU	Level-1-260C-UNLIM
TL494CDE4	ACTIVE	SOIC	D	16	40	Green (RoHS & no Sb/Br)	CU NIPDAU	Level-1-260C-UNLIM
TL494CDR	ACTIVE	SOIC	D	16	2500	Green (RoHS & no Sb/Br)	CU NIPDAU	Level-1-260C-UNLIM
TL494CDRE4	ACTIVE	SOIC	D	16	2500	Green (RoHS & no Sb/Br)	CU NIPDAU	Level-1-260C-UNLIM
TL494CJ	OBSOLETE	CDIP	J	16		TBD	Call TI	Call TI
TL494CN	ACTIVE	PDIP	N	16	25	Pb-Free (RoHS)	CU NIPDAU	Level-NC-NC-NC
TL494CNE4	ACTIVE	PDIP	N	16	25	Pb-Free (RoHS)	CU NIPDAU	Level-NC-NC-NC
TL494CNSR	ACTIVE	SO	NS	16	2000	Green (RoHS & no Sb/Br)	CU NIPDAU	Level-1-260C-UNLIM
TL494CNSRG4	ACTIVE	SO	NS	16	2000	Green (RoHS & no Sb/Br)	CU NIPDAU	Level-1-260C-UNLIM
TL494CPW	ACTIVE	TSSOP	PW	16	90	Green (RoHS & no Sb/Br)	CU NIPDAU	Level-1-260C-UNLIM
TL494CPWG4	ACTIVE	TSSOP	PW	16	90	Green (RoHS & no Sb/Br)	CU NIPDAU	Level-1-260C-UNLIM
TL494CPWLE	OBSOLETE	TSSOP	PW	16		TBD	Call TI	Call TI
TL494CPWR	ACTIVE	TSSOP	PW	16	2000	Green (RoHS & no Sb/Br)	CU NIPDAU	Level-1-260C-UNLIM
TL494CPWRG4	ACTIVE	TSSOP	PW	16	2000	Green (RoHS & no Sb/Br)	CU NIPDAU	Level-1-260C-UNLIM
TL494ID	ACTIVE	SOIC	D	16	40	Green (RoHS & no Sb/Br)	CU NIPDAU	Level-1-260C-UNLIM
TL494IDE4	ACTIVE	SOIC	D	16	40	Green (RoHS & no Sb/Br)	CU NIPDAU	Level-1-260C-UNLIM
TL494IDR	ACTIVE	SOIC	D	16	2500	Green (RoHS & no Sb/Br)	CU NIPDAU	Level-1-260C-UNLIM
TL494IDRE4	ACTIVE	SOIC	D	16	2500	Green (RoHS & no Sb/Br)	CU NIPDAU	Level-1-260C-UNLIM
TL494IN	ACTIVE	PDIP	N	16	25	Pb-Free (RoHS)	CU NIPDAU	Level-NC-NC-NC
TL494INE4	ACTIVE	PDIP	N	16	25	Pb-Free (RoHS)	CU NIPDAU	Level-NC-NC-NC
TL494MJ	OBSOLETE	CDIP	J	16		TBD	Call TI	Call TI
TL494MJB	OBSOLETE	CDIP	J	16		TBD	Call TI	Call TI

(1) The marketing status values are defined as follows:
ACTIVE: Product device recommended for new designs.
LIFEBUY: TI has announced that the device will be discontinued, and a lifetime-buy period is in effect.
NRND: Not recommended for new designs. Device is in production to support existing customers, but TI does not recommend using this part in a new design.

PREVIEW: Device has been announced but is not in production. Samples may or may not be available.
OBSOLETE: TI has discontinued the production of the device.

(2) Eco Plan - The planned eco-friendly classification: Pb-Free (RoHS) or Green (RoHS & no Sb/Br) - please check http://www.ti.com/productcontent for the latest availability information and additional product content details.
TBD: The Pb-Free/Green conversion plan has not been defined.
Pb-Free (RoHS): TI's terms "Lead-Free" or "Pb-Free" mean semiconductor products that are compatible with the current RoHS requirements for all 6 substances, including the requirement that lead not exceed 0.1% by weight in homogeneous materials. Where designed to be soldered at high temperatures, TI Pb-Free products are suitable for use in specified lead-free processes.
Green (RoHS & no Sb/Br): TI defines "Green" to mean Pb-Free (RoHS compatible), and free of Bromine (Br) and Antimony (Sb) based flame retardants (Br or Sb do not exceed 0.1% by weight in homogeneous material)

(3) MSL, Peak Temp. -- The Moisture Sensitivity Level rating according to the JEDEC industry standard classifications, and peak solder temperature.

Important Information and Disclaimer: The information provided on this page represents TI's knowledge and belief as of the date that it is provided. TI bases its knowledge and belief on information provided by third parties, and makes no representation or warranty as to the accuracy of such information. Efforts are underway to better integrate information from third parties. TI has taken and continues to take reasonable steps to provide representative and accurate information but may not have conducted destructive testing or chemical analysis on incoming materials and chemicals. TI and TI suppliers consider certain information to be proprietary, and thus CAS numbers and other limited information may not be available for release.

In no event shall TI's liability arising out of such information exceed the total purchase price of the TI part(s) at issue in this document sold by TI to Customer on an annual basis.

J (R–GDIP–T**) CERAMIC DUAL IN–LINE PACKAGE

14 LEADS SHOWN

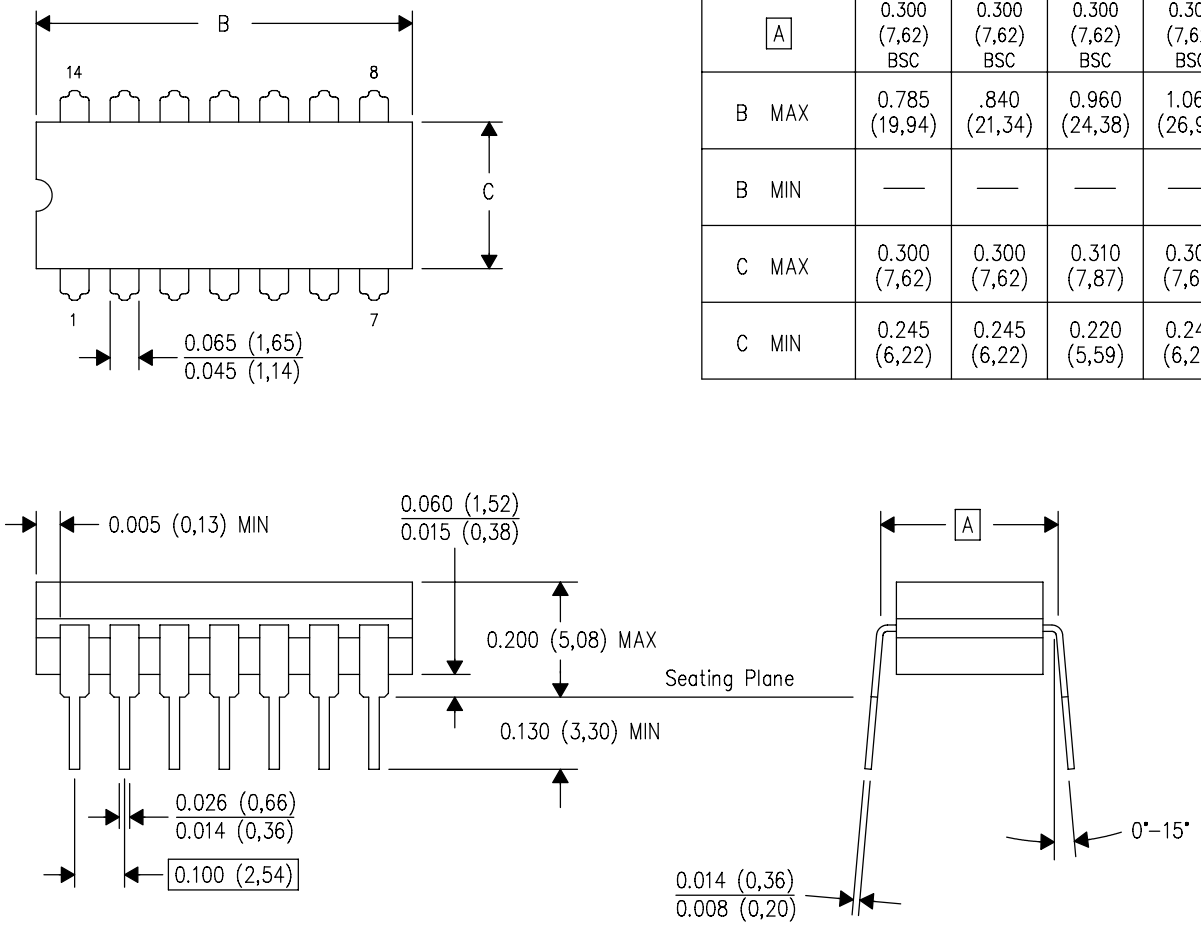

DIM \ PINS **	14	16	18	20
A	0.300 (7,62) BSC	0.300 (7,62) BSC	0.300 (7,62) BSC	0.300 (7,62) BSC
B MAX	0.785 (19,94)	.840 (21,34)	0.960 (24,38)	1.060 (26,92)
B MIN	—	—	—	—
C MAX	0.300 (7,62)	0.300 (7,62)	0.310 (7,87)	0.300 (7,62)
C MIN	0.245 (6,22)	0.245 (6,22)	0.220 (5,59)	0.245 (6,22)

4040083/F 03/03

NOTES:
- A. All linear dimensions are in inches (millimeters).
- B. This drawing is subject to change without notice.
- C. This package is hermetically sealed with a ceramic lid using glass frit.
- D. Index point is provided on cap for terminal identification only on press ceramic glass frit seal only.
- E. Falls within MIL STD 1835 GDIP1–T14, GDIP1–T16, GDIP1–T18 and GDIP1–T20.

N (R–PDIP–T**) PLASTIC DUAL–IN–LINE PACKAGE

16 PINS SHOWN

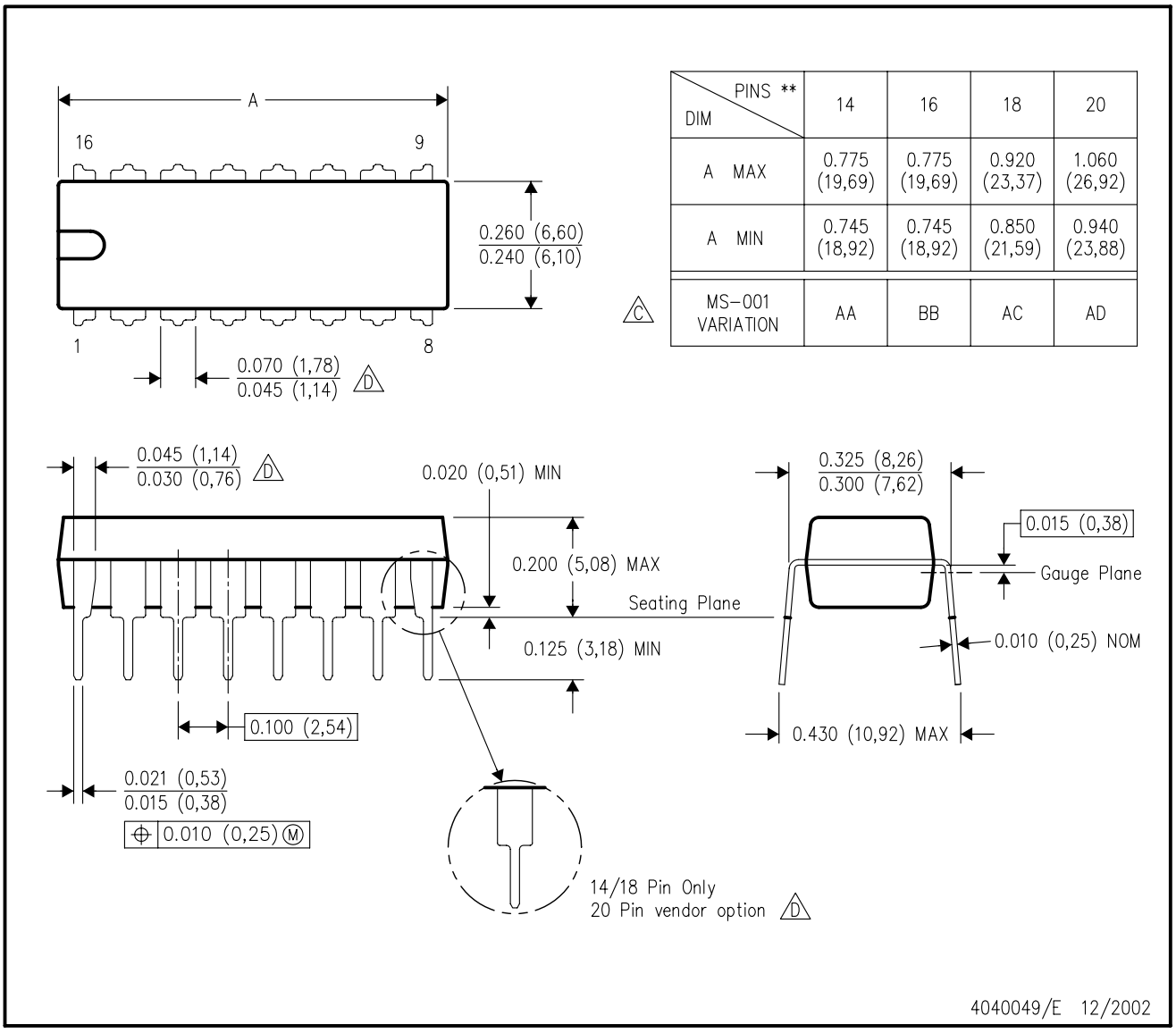

DIM \ PINS **	14	16	18	20
A MAX	0.775 (19,69)	0.775 (19,69)	0.920 (23,37)	1.060 (26,92)
A MIN	0.745 (18,92)	0.745 (18,92)	0.850 (21,59)	0.940 (23,88)
MS–001 VARIATION (C)	AA	BB	AC	AD

NOTES:
A. All linear dimensions are in inches (millimeters).
B. This drawing is subject to change without notice.
C. Falls within JEDEC MS–001, except 18 and 20 pin minimum body length (Dim A).
D. The 20 pin end lead shoulder width is a vendor option, either half or full width.

D (R–PDSO–G16) PLASTIC SMALL–OUTLINE PACKAGE

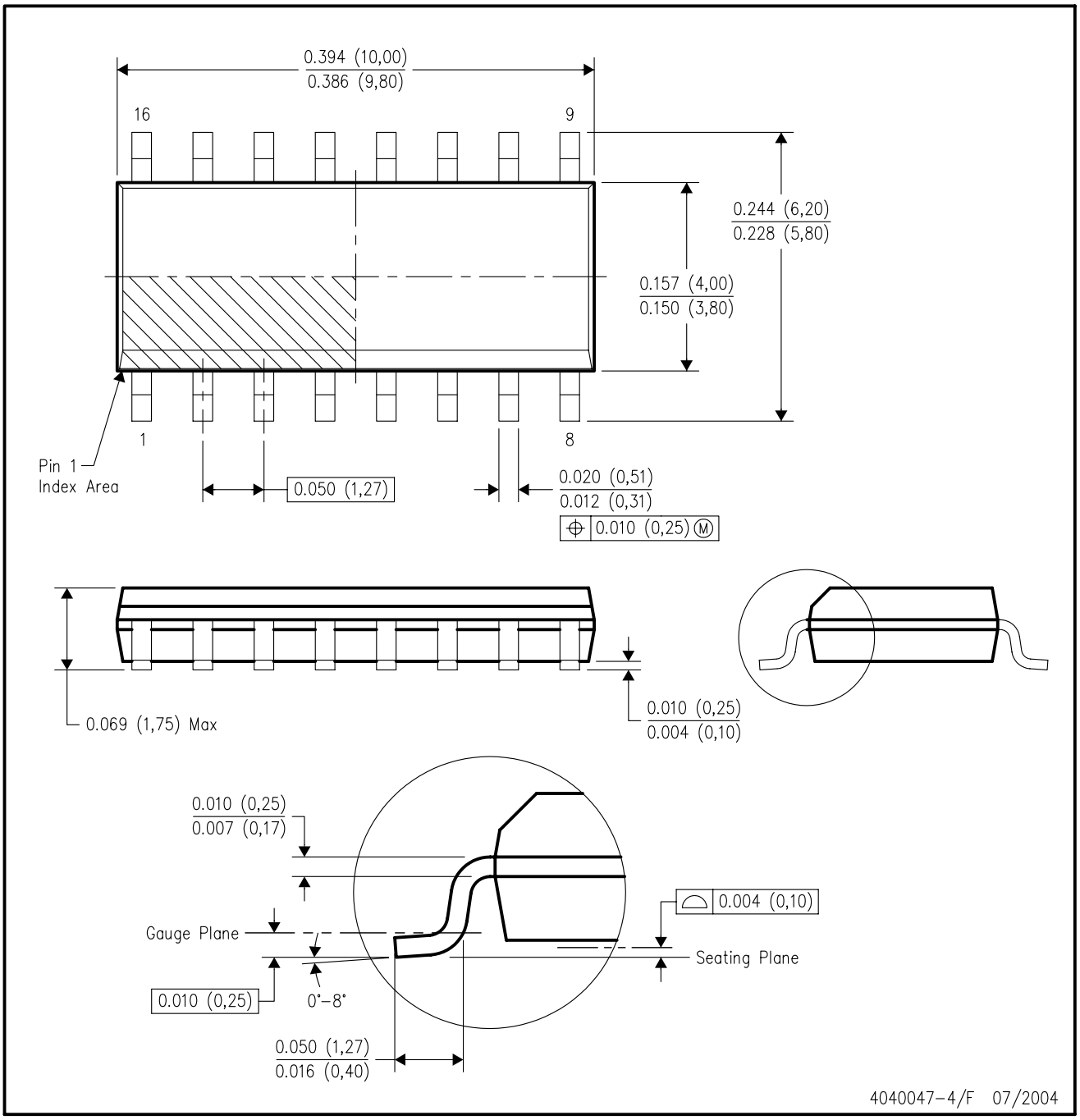

NOTES:
A. All linear dimensions are in inches (millimeters).
B. This drawing is subject to change without notice.
C. Body dimensions do not include mold flash or protrusion not to exceed 0.006 (0,15).
D. Falls within JEDEC MS–012 variation AC.

MECHANICAL DATA

NS (R-PDSO-G)** **PLASTIC SMALL-OUTLINE PACKAGE**

14-PINS SHOWN

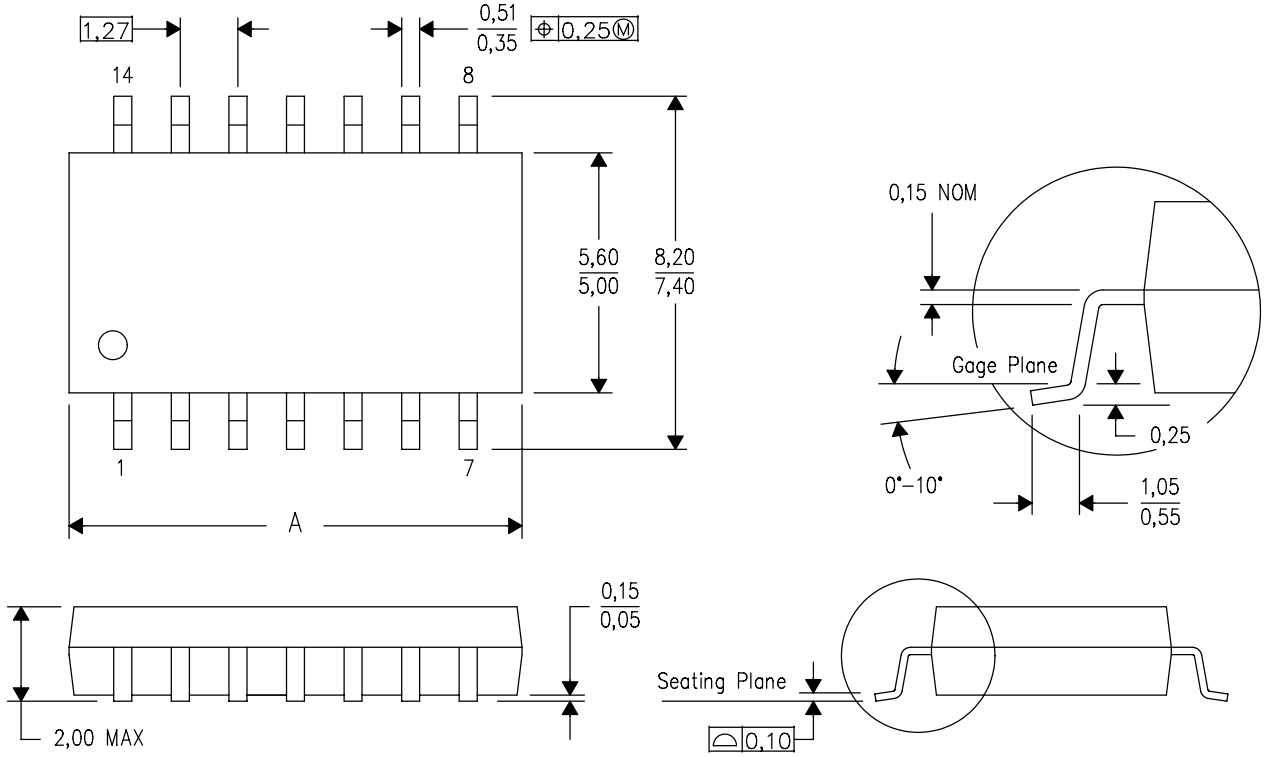

DIM \ PINS **	14	16	20	24
A MAX	10,50	10,50	12,90	15,30
A MIN	9,90	9,90	12,30	14,70

4040062/C 03/03

NOTES:
A. All linear dimensions are in millimeters.
B. This drawing is subject to change without notice.
C. Body dimensions do not include mold flash or protrusion, not to exceed 0,15.

DB (R-PDSO-G)** **PLASTIC SMALL-OUTLINE**

28 PINS SHOWN

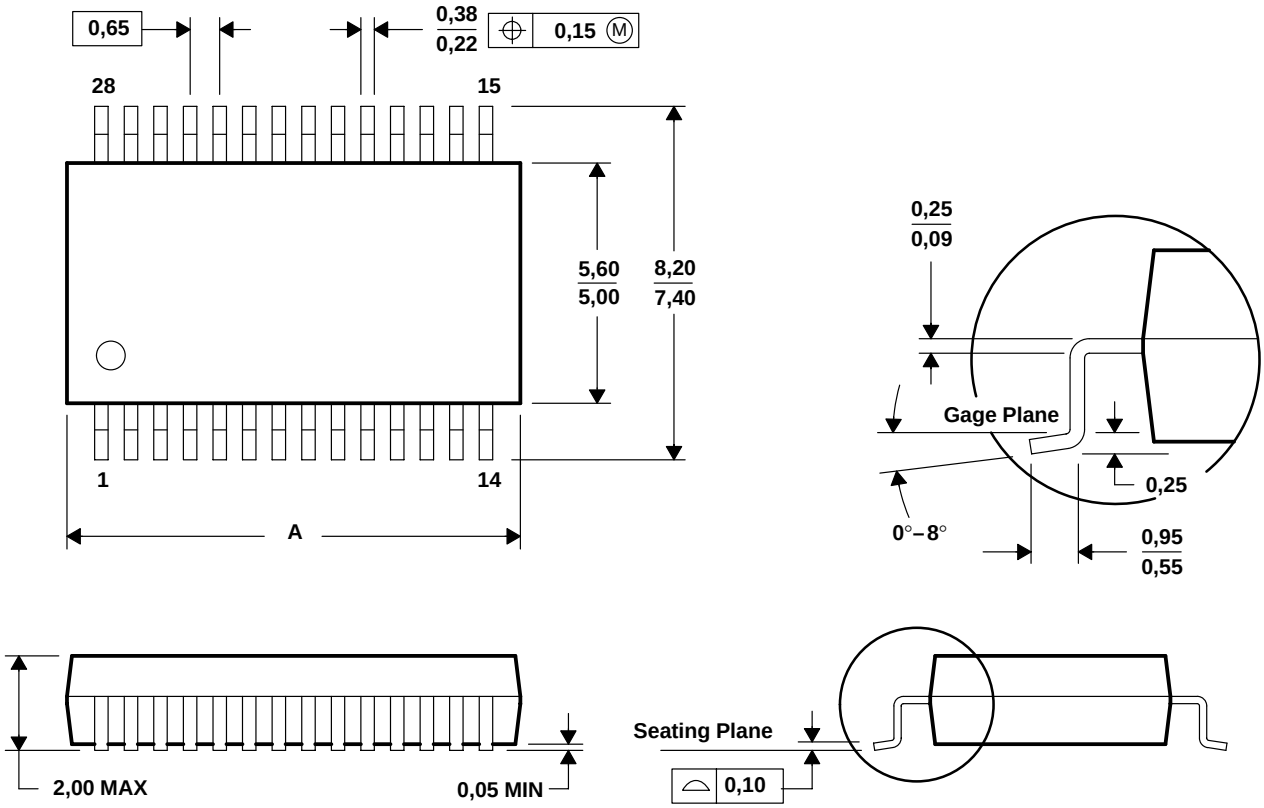

DIM \ PINS **	14	16	20	24	28	30	38
A MAX	6,50	6,50	7,50	8,50	10,50	10,50	12,90
A MIN	5,90	5,90	6,90	7,90	9,90	9,90	12,30

4040065 /E 12/01

NOTES: A. All linear dimensions are in millimeters.
B. This drawing is subject to change without notice.
C. Body dimensions do not include mold flash or protrusion not to exceed 0,15.
D. Falls within JEDEC MO-150

PW (R-PDSO-G)** **PLASTIC SMALL-OUTLINE PACKAGE**

14 PINS SHOWN

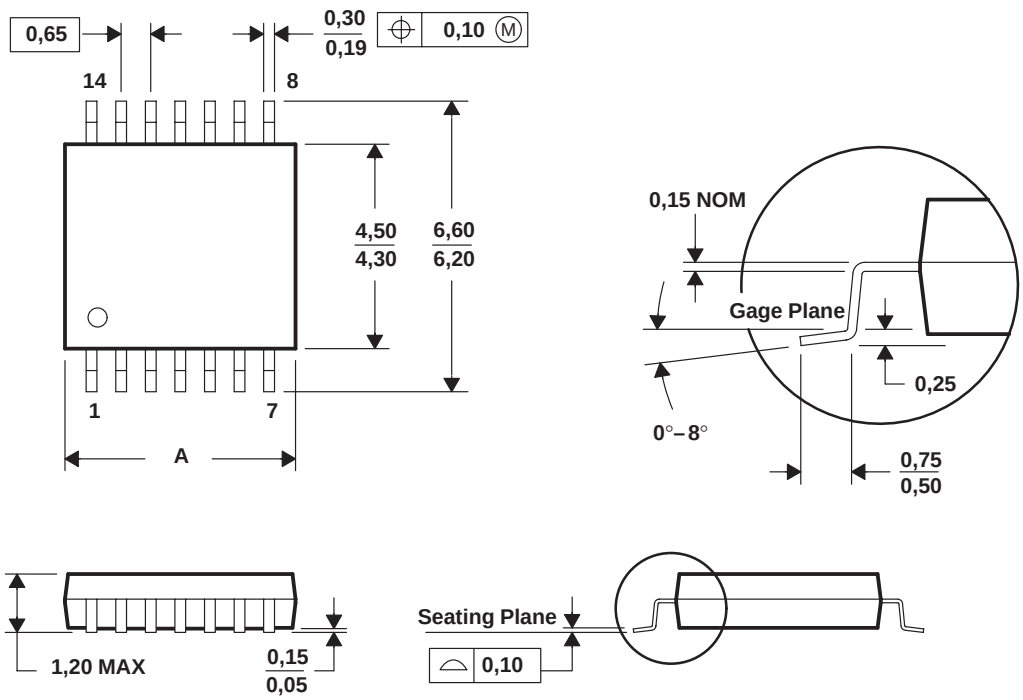

DIM \ PINS **	8	14	16	20	24	28
A MAX	3,10	5,10	5,10	6,60	7,90	9,80
A MIN	2,90	4,90	4,90	6,40	7,70	9,60

4040064/F 01/97

NOTES: A. All linear dimensions are in millimeters.
B. This drawing is subject to change without notice.
C. Body dimensions do not include mold flash or protrusion not to exceed 0,15.
D. Falls within JEDEC MO-153

IMPORTANT NOTICE

Texas Instruments Incorporated and its subsidiaries (TI) reserve the right to make corrections, modifications, enhancements, improvements, and other changes to its products and services at any time and to discontinue any product or service without notice. Customers should obtain the latest relevant information before placing orders and should verify that such information is current and complete. All products are sold subject to TI's terms and conditions of sale supplied at the time of order acknowledgment.

TI warrants performance of its hardware products to the specifications applicable at the time of sale in accordance with TI's standard warranty. Testing and other quality control techniques are used to the extent TI deems necessary to support this warranty. Except where mandated by government requirements, testing of all parameters of each product is not necessarily performed.

TI assumes no liability for applications assistance or customer product design. Customers are responsible for their products and applications using TI components. To minimize the risks associated with customer products and applications, customers should provide adequate design and operating safeguards.

TI does not warrant or represent that any license, either express or implied, is granted under any TI patent right, copyright, mask work right, or other TI intellectual property right relating to any combination, machine, or process in which TI products or services are used. Information published by TI regarding third-party products or services does not constitute a license from TI to use such products or services or a warranty or endorsement thereof. Use of such information may require a license from a third party under the patents or other intellectual property of the third party, or a license from TI under the patents or other intellectual property of TI.

Reproduction of information in TI data books or data sheets is permissible only if reproduction is without alteration and is accompanied by all associated warranties, conditions, limitations, and notices. Reproduction of this information with alteration is an unfair and deceptive business practice. TI is not responsible or liable for such altered documentation.

Resale of TI products or services with statements different from or beyond the parameters stated by TI for that product or service voids all express and any implied warranties for the associated TI product or service and is an unfair and deceptive business practice. TI is not responsible or liable for any such statements.

Following are URLs where you can obtain information on other Texas Instruments products and application solutions:

Products		**Applications**	
Amplifiers	amplifier.ti.com	Audio	www.ti.com/audio
Data Converters	dataconverter.ti.com	Automotive	www.ti.com/automotive
DSP	dsp.ti.com	Broadband	www.ti.com/broadband
Interface	interface.ti.com	Digital Control	www.ti.com/digitalcontrol
Logic	logic.ti.com	Military	www.ti.com/military
Power Mgmt	power.ti.com	Optical Networking	www.ti.com/opticalnetwork
Microcontrollers	microcontroller.ti.com	Security	www.ti.com/security
		Telephony	www.ti.com/telephony
		Video & Imaging	www.ti.com/video
		Wireless	www.ti.com/wireless

Mailing Address: Texas Instruments
Post Office Box 655303 Dallas, Texas 75265

Copyright © 2005, Texas Instruments Incorporated