Ordering number: EN2162A

SANYO

No.2162A

2SA1522/2SC3916

PNP/ NPN Epitaxial Planar Silicon Transistors

Switching Applications (with Bias Resistance)

Applications

- Switching circuits, inverter circuits, interface circuits, driver circuits

Features

- On-chip bias resistance (R_1=10kΩ, R_2=10kΩ)
- Small-sized package (SPA)
- Large current capacity (I_C=500mA)

( ): 2SA1522

Absolute Maximum Ratings at Ta=25°C

			unit
Collector to Base Voltage	V_{CBO}	(-)50	V
Collector to Emitter Voltage	V_{CEO}	(-)50	V
Emitter to Base Voltage	V_{EBO}	(-)10	V
Collector Current	I_C	(-)500	mA
Collector Current (Pulse)	I_{CP}	(-)800	mA
Collector Dissipation	P_C	300	mW
Junction Temperature	Tj	150	°C
Storage Temperature	Tstg	-55 to +150	°C

Electrical Characteristics at Ta=25°C

			min	typ	max	unit
Collector Cutoff Current	I_{CBO}	V_{CB}=(-)40V, I_E=0			(-)0.1	μA
	I_{CEO}	V_{CE}=(-)40V, I_B=0			(-)0.5	μA
Emitter Cutoff Current	I_{EBO}	V_{EB}=(-)5V, I_C=0	(-)195	(-)250	(-)360	μA
DC Current Gain	h_{FE}	V_{CE}=(-)5V, I_C=(-)10mA	50			
Gain-Bandwidth Product	f_T	V_{CE}=(-)10V, I_C=(-)5mA		250		MHz
				(200)		MHz
Output Capacitance	C_{ob}	V_{CB}=(-)10V, f=1MHz		3.7		pF
				(5.5)		pF
C-E Saturation Voltage	$V_{CE(sat)}$	I_C=(-)20mA, I_B=(-)1mA		(-)0.1	(-)0.3	V
C-B Breakdown Voltage	$V_{(BR)CBO}$	I_C=(-)10μA, I_E=0	(-)50			V
C-E Breakdown Voltage	$V_{(BR)CEO}$	I_C=(-)100μA, R_{BE}=∞	(-)50			V
Input OFF-State Voltage	$V_{I(off)}$	V_{CE}=(-)5V, I_C=(-)100μA	(-)0.8	(-)1.1	(-)1.5	V
Input ON-State Voltage	$V_{I(on)}$	V_{CE}=(-)0.2V, I_C=(-)10mA	(-)1.0	(-)2.0	(-)4.0	V
Input Resistance	R_1		7	10	13	kΩ
Resistance Ratio	R_1/R_2		0.9	1.0	1.1	

Electrical Connection

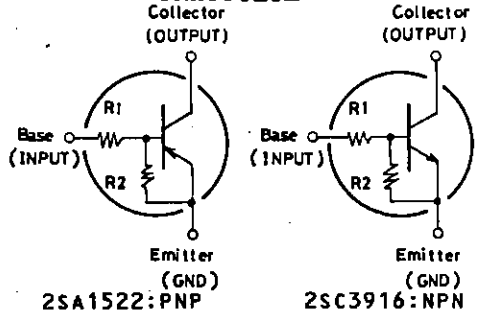

2SA1522:PNP 2SC3916:NPN

Package Dimensions 2033
(unit: mm)

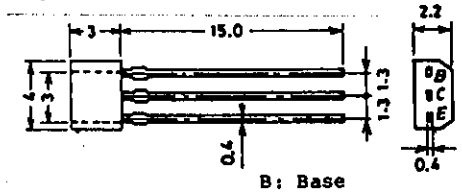

B: Base
C: Collector
E: Emitter

SANYO: SPA

SANYO Electric Co.,Ltd. Semiconductor Business Headquarters
TOKYO OFFICE Tokyo Bldg., 1-10, 1 Chome, Ueno, Taito-ku, TOKYO, 110 JAPAN