S5X713CX03-20R0-40AJAA
(1/7” CIF CIS Camera Module)

Preliminary Specification

Revision 2.3.1

Jan. 2003

DOCUMENT TITLE

1/7" Optical Size 352x288(CIF) CIS Camera Module

REVISION HISTORY

Revision No.	History	Draft Date	Remark
0.0	Initial draft	Sep. 17, 2001	Preliminary
1.0	Mechanical dimension changed	Mar. 25, 2002	Preliminary
2.0	IO pin diagram changed Mechanical dimension changed	Sep. 2, 2002	Preliminary
2.1	Some bugs are fixed Timing characteristics changed	Sep. 14, 2002	Preliminary
2.2	Register map information changed	Jan. 2, 2003	Preliminary
2.3.1	ESD characteristic is improved by electric conduction tape	Jan. 10, 2003	Preliminary

INTRODUCTION

The S5X713CX03-20R0-40AJAA is fully functional camera module with embedded lens. A low-noise low-power color CMOS image sensor, S5K713CX03 and an image signal processor, S5C7322X produce high-quality digital video output including CCIR656 format with maximum 30 frames per second for full frame readout. The CMOS image sensor, fabricated by SAMSUNG 0.35μm CMOS image sensor process technology which is dedicated to higher-sensitivity and lower-dark level compared to standard CMOS process technology and on-chip CDS and 8-bit column ADC circuit makes high signal-to-noise ratio with low power consumption. The image sensor, signal processor and some passive components are packed with IR-cut filter and lens units to have very small volume of whole camera system. It needs only 2.8V single power supply and a main clock supplied to operate. All the function can be controlled by control register setting through the standard 2-wire serial interface.

FEATURES

- Optical Size: 1/7 inch
- Unit Pixel: 5.6 μm X 5.6 μm
- Effective Resolution: 352X288, CIF
- 8-bit CCIR656(YCrCb) Video Output
- CIF, QCIF Output Capability
- Programmable Gamma Correction
- Auto White Balance and Auto Exposure Control
- Horizontal and/or Vertical Mirror Output
- Standby-Mode for Power Saving
- Maximum 30 Frame per Second
- 2.8V Single Power Supply Voltage
- I2C Type Control Interface

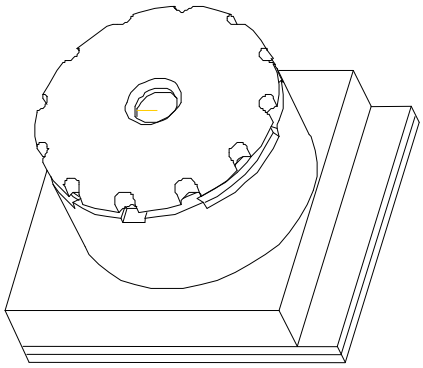

BLOCK DIAGRAM

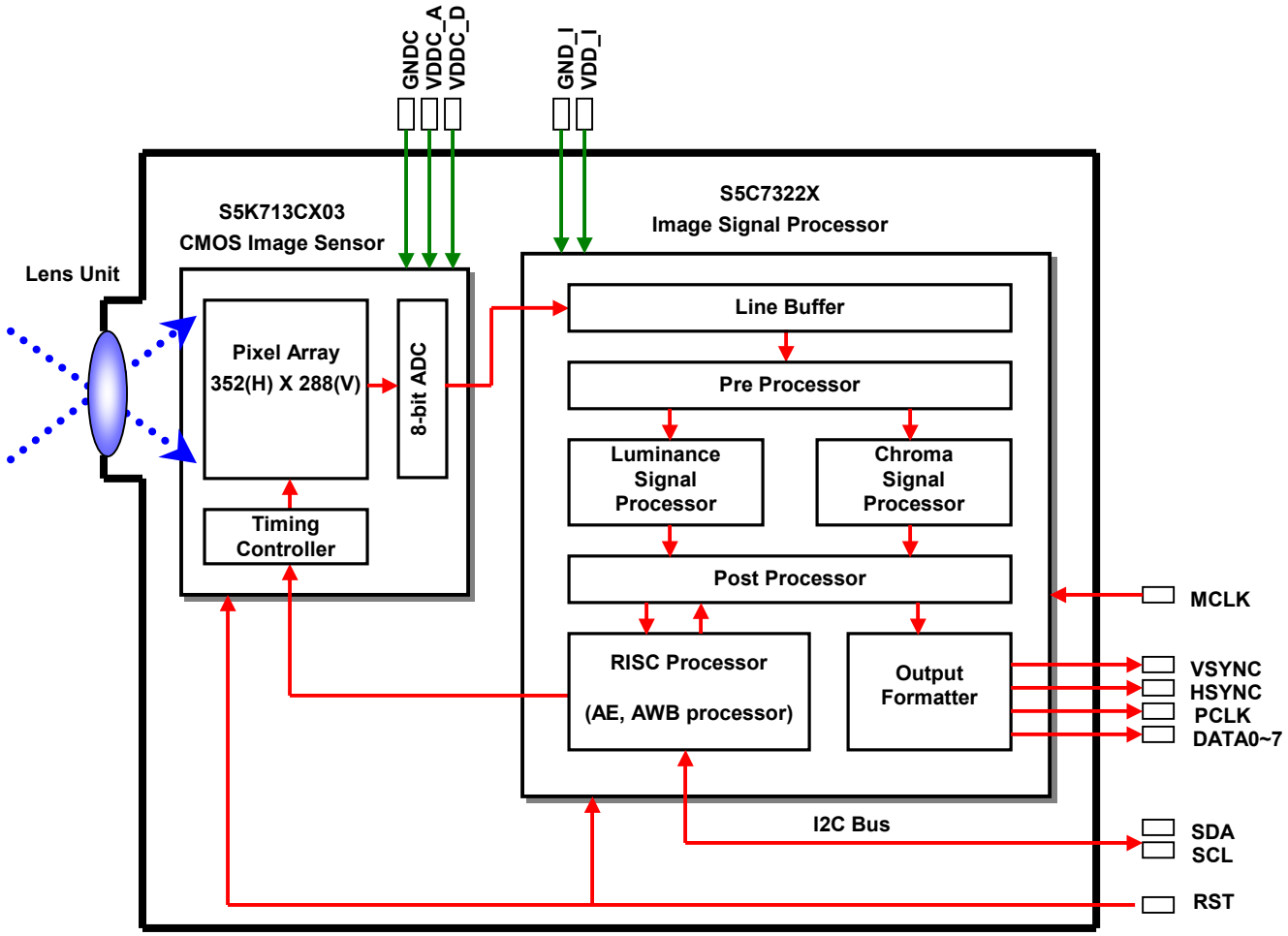

OPTICAL CHARACTERISTICS

Characteristic	Value
Optical format	1/7 inch
Effective resolution	352 (H) X 288 (V), CIF
Unit pixel size	5.6μm (H) X 5.6μm (V), square pixel
Minimum object illumination(1)	5 lux
Lens construction	1Plastic ASP lens
Field of view in horizontal, vertical, and diagonal direction	57° (H), 47° (V), 72° (D)
Effective focal length	f = 2.0 mm
Aperture	F = 2.8
TV distortion	-2.52 %
Full field distortion	-5.94 %
MTF at center	40% at 80 lp/mm
MTF at 0.7 field	18% at 80 lp/mm
Depth of field	10 cm ~ ∞
Optical track	3.00 mm

NOTES:

1. 25 IRE in NTSC converted with white of gray scale chart. 30 FPS operation.

I/O PIN DESCRIPTION

(Connector type and pin numbers can be changed as customer's request.)

Module Pad	Connector Pin	Pin Name	Characteristic	Function
1	12	VDD_I	Power	Power supply for signal processor (digital)
2	6	GND_I	Ground	Ground for signal processor
3	19	SDL1	In/Out	I^2C serial communication clock
4	17	SDA1	In/Out	I^2C serial communication data
5	10	RST	In	Reset control (active low)
6	X	STBY	In	Standby mode control (active low)
7	2	MCLK	In	Master input clock
8	7	VSO	Out	Vertical synchronization clock
9	5	HSO	Out	Horizontal synchronization clock
10	3	PCLK	Out	Pixel output clock
11	16	YCO0	Out	8-bit digital video output
12	18	YCO1	Out	
13	20	YCO2	Out	
14	15	YCO3	Out	
15	13	YCO4	Out	
16	11	YCO5	Out	
17	9	YCO6	Out	
18	1	YCO7	Out	
19	4	GNDC	Ground	Ground for sensor
20	12	VDDC_D	Power	Power supply for sensor digital circuit block
21	12	VDDC_A	Power	Power supply for sensor analog circuit block

MAXIMUM ABSOLUTE LIMIT

Characteristic	Symbol	Value	Unit
Operating Voltage (VDD_I, VDDC_D, VDDC_A supply relative to GND_I, GNDC)	V_{DD}	-0.3 to 3.8	V
Input Voltage	V_{IN}	-0.3 to V_{DD}+0.3 (Max. 3.8)	
*Operating Temperature	T_{OPR}	*-20 to +60	°C
*Storage Temperature	T_{STG}	*-30 to +85	

NOTES:*Operating temperature and *Storage temperature are not confirmed.

ELECTRICAL CHARACTERISTICS

DC Characteristics

(T_A = -20 to +60°C, C_L = 15pF)

Characteristics	Symbol	Condition	Min	Typ	Max	Unit
Operating Voltage	V_{DD}	VDD_I, VDDC_D, VDDC_A	(2.55)	(2.8)	(3.05)	V
Input Voltage (1)	V_{IH}	-	(2.0)	-	-	V
	V_{IL}	-	-	-	(0.8)	
Input Leakage Current(1)	I_{IL}	V_{IN} = V_{DD} to V_{SS}	(-10)	-	(10)	μA
High Level Output Voltage	V_{OH}	I_{OH} = -4mA(2)	(0.8V_{DD})	-	-	V
		I_{OH} = -8mA(3)				
Low Level Output Voltage	V_{OL}	I_{OL} = 4mA(2)	-	-	(0.2V_{DD})	
		I_{OL} = 8mA(3)				
High-Z Output Leakage Current (4)	I_{OZ}	V_{OUT} = V_{DD}	-	-	(10)	μA
Supply Current	I_{STB}	STBYN=Low(Active) All input clocks = Low	-	-	(10)	μA
	I_{DD}	f_{MCLK} = 12MHz, 30 FPS, dark	-	(48)	-	mA

NOTES:
1. MCLK, RSTN, SCL, SDA pin.
2. HSYNC, VSYNC, SCL, SDA pin
3. PCLK, DATA0 to DATA7 pin
4. SCL and SDA pin when in High-Z output state

Sensor Imaging Characteristics

(Light source with 3200K of color temperature and IR cut filter (CM-500S, 1mm thickness) is used. Electrical operating conditions follow the recommended typical values. The control registers are set to the default values. The ambient temperature, T_A is 25°C if not specified.)

Characteristic	Symbol	Condition	Min	Typ	Max	Unit
Saturation level(1)	V_{SAT}		(850)	(900)	-	mV
Sensitivity(2)	S		-	(2000)	-	mV/lux sec
Dark level(3)	V_{DARK}	T_A = 40°C	-	(9)	(18)	mV/sec
		T_A = 60°C	-	(50)	(100)	
Dynamic range(4)	DR		-	(48)	-	dB
Signal to noise ratio(5)	S/N		-	(40)	-	
Dark signal non-uniformity(6)	DSNU	T_A = 60°C	-	-	(100)	mV/sec
Photo response non-uniformity(7)	PRNU		-	(4)	(8)	%
Vertical fixed pattern noise(8)	VFPN			(4)	(8)	%
Horizontal fixed pattern noise(9)	HFPN			(4)	(8)	%

NOTES:

1. Measured minimum output level at 100-lux illumination for exposure time 1/30 sec. 7X7 rank filter is applied for the whole pixel area to eliminate the values from defective pixels.
2. Measured average output at 25% of saturation level illumination for exposure time 1/30 sec. Green channel output values are used for color version.
3. Measured average output at zero illumination without any offset compensation for exposure time 1/30 sec.
4. 20 log (saturation level/ dark level rms noise excluding fixed pattern noise). 8-bit ADC limits 48dB.
5. 20 log (average output level/rms noise excluding fixed pattern noise) at 25% of saturation level illumination for exposure time 1/30 sec.
6. Difference between maximum and minimum pixel output levels at zero illumination for exposure time 1/30 sec. 7X7 median filter is applied for the whole pixel area to eliminate the values from defective pixels.
7, Difference between maximum and minimum pixel output levels divided by average output level at 25% of saturation level illumination for exposure time 1/30 sec. 7X7 median filter is applied for the whole pixel area to eliminate the values from defective pixels.
8. For the column-averaged pixel output values, maximum relative deviation of values from 7-depth median filtered values for neighboring 7 columns at 25% of saturation level illumination for exposure time 1/30 sec.
9. For the row-averaged pixel output values, maximum relative deviation of values from 7-depth median filtered values for neighboring 7 columns at 25% of saturation level illumination for exposure time 1/30 sec.

AC Characteristics

(V_{DD} = 2.55V to 3.05V for S5K711LA, Ta = -20 to + 60 °C, C_L = TBD pF, 15FPS)

Characteristic	Symbol	Condition	Min	Typ	Max	Unit
Main input clock frequency	f_{MCLK}	Duty = 50%	(6)	(12)	(30)	MHz
Data output clock frequency	f_{DCLK}	-	(2)	(6)	(15)	
Propagation delay time from main input clock	t_{PDMD}	DCLK output	-	-	(20)	ns
	t_{PDMO}	DATA output	-	-	(20)	
	t_{PDMH}	HSYNC output	-	-	(15)	
	t_{PDMV}	VSYNC output	-	-	(20)	
Propagation delay time from data output clock	t_{PDDO}	DATA output	-	-	(10)	
	t_{PDDH}	HSYNC output	-	-	(5)	
	t_{PDDV}	VSYNC output	-	-	(5)	
Reset input pulse width	t_{WRST}	RSTN=low(active)	(5)	-	-	T_{MCLK}(2)
Standby input pulse width	t_{WSTB}	STBYN=low(active)	(4)	-	-	

NOTES:

1. 8-bit ADC resolution case. If 8-bit ADC resolution is used, the frequency should be over 12MHz.
2. The period time of main input clock, **MCLK**.

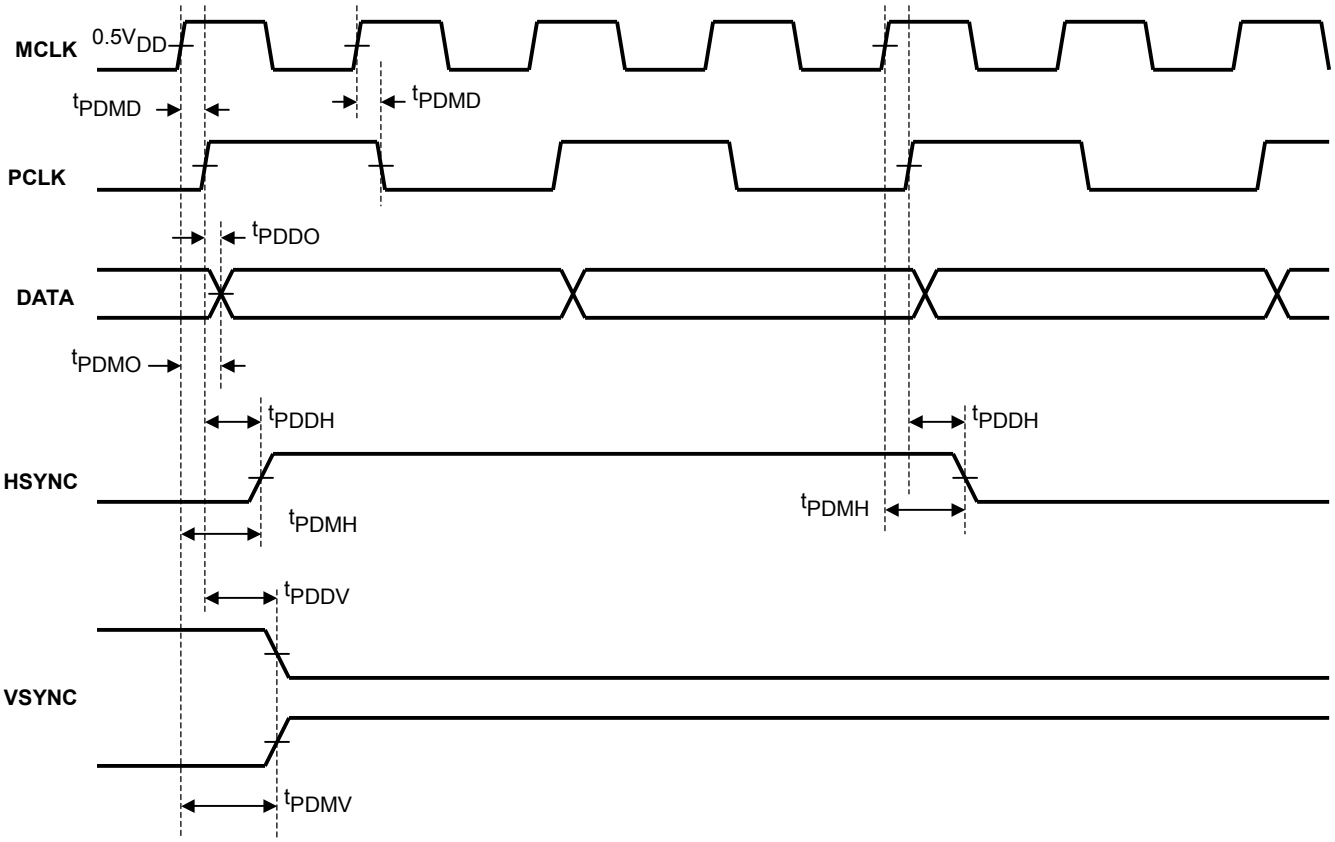

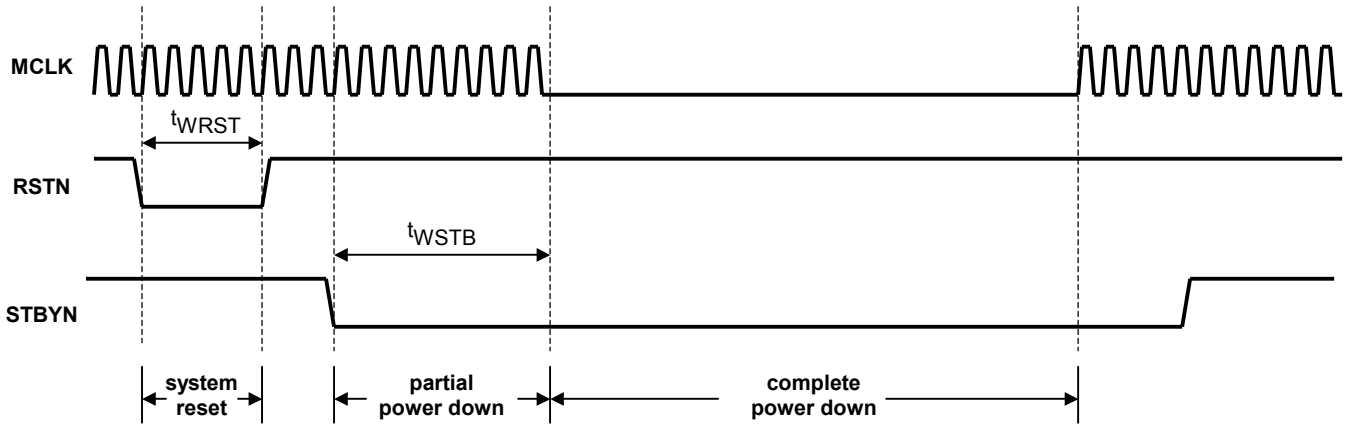

OUTPUT IMAGE MODE

No.	Mode	Resolution (H X V)	Data rate (PCLK)	Zoom	Frame rate with MCLK=24.54MHz
1	CIF	352X288	**MCLK**	X 5/3	30 FPS
2	QCIF	176X144	**MCLK** / 4	X 5/3	30 FPS

OUTPUT DATA FORMAT

YC_RC_B 4:2:2 FORMAT

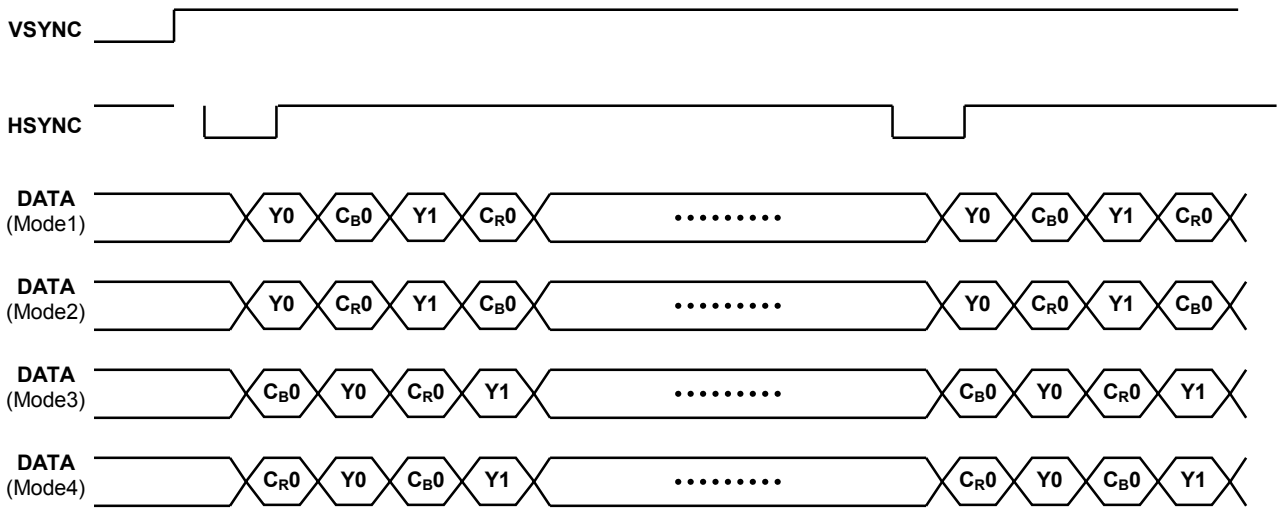

RGB565 FORMAT

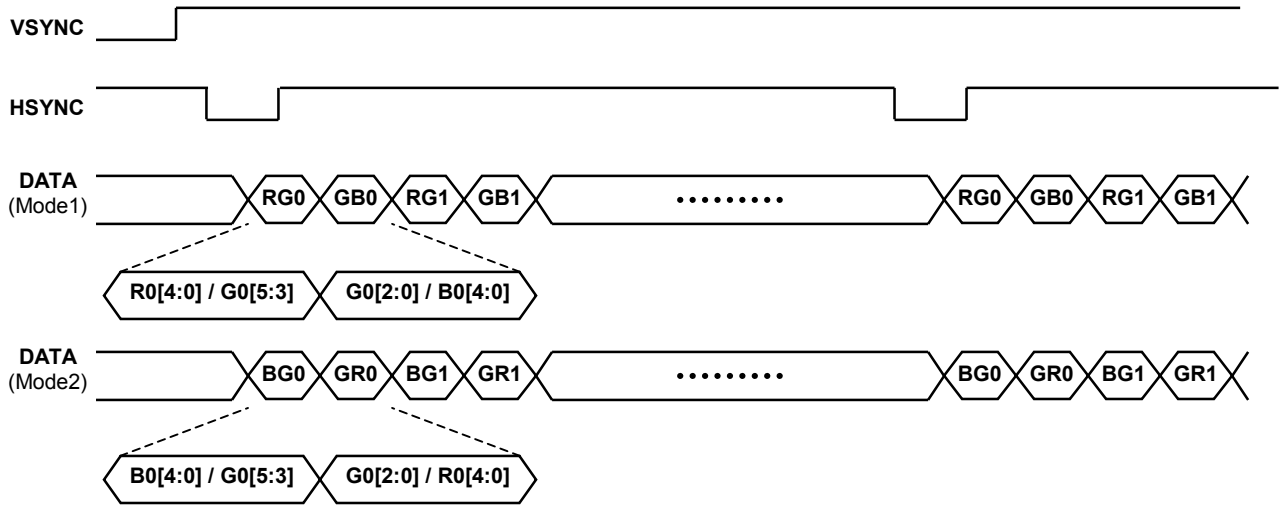

SENSOR RAW IMAGE (BAYER MOSAIC PATTERN) FORMAT

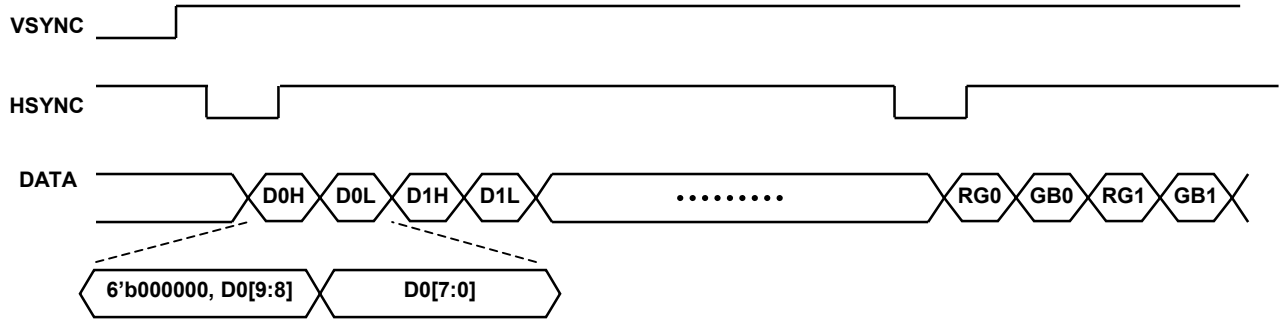

IMAGE PROCESSING FUNCTIONS

Function	Description	Remarks
Defect detection and correction	If enabled, the defective pixels are detected by comparing its level with horizontally neighboring pixels and replaced by the averaged value of neighboring pixels.	
De-mosaic	The sensor produces one color component from a pixel according to Bayer color filter array. The de-mosaic function performs color interpolation to produce all three-color components at each pixel location.	
Color correction	The spectral response of image sensor is not same to that human eye. To match the spectral response, the sensor output components are pivoted by user programmable 3X3 matrix production.	
Gamma correction	Gamma correction translating the linear response of the sensor into the non-linear characteristics of the display. To make a non-linear conversion, a piecewise linear approximation method based on user programmable lookup table is used.	
Horizontal mirror	The output image can be mirrored in horizontal direction.	
Vertical mirror	The output image can be mirrored in vertical direction.	
Edge enhancement	Enhancing the edge component can attain a clear output image. To perform the edge enhancement function, horizontal and vertical edge detecting and enhancing is processed.	
Auto exposure	According to the incident light level, the auto exposure function controls the sensor gain and effective integration time to maintain the proper output level. Setting the control registers can change the sensing area used in the AE algorithm. The range of incident light level is as followed; 5 lux ~ 80000 lux	
Auto white balance	The auto white balance function adjusts the gain of the sensor's red and blue channels relative to the green channel to compensate the spectral unbalancing of the light source. Setting the control registers can change the sensing area used in the AWB algorithm. The range of color temperature range of light source which can be compensated is as followed; 2500 K ~ 10000 K	
Flicker elimination	Automatic flicker elimination for suppressing banding noise is done by changing the exposure time.	
Output format conversion	4 types of output format are available. (CCIR656 format, RGB format and sensor raw image output format)	

I²C SERIAL INTERFACE

The I²C is an industry standard serial interface. The I²C contains a serial two-wire half duplex interface that features bi-directional operation, master or slave mode. The general **SDA** and **SCL** are the bi -directional data and clock pins, respectively. These pins are open-drain type ports and will require a pull-up resistor to VDD. The image sensor operates in salve mode only and the **SCL** is input only. The I²C bus interface is composed of following parts: START signal, 7-bit slave device address (0101101b) transmission followed by a read/write bit, an acknowledgement signal from the slave, 8-bit data transfer followed by an acknowledgement signal and STOP signal. The **SDA** bus line may only be changed while **SCL** is low. The data on the **SDA** bus line is valid on the high-to-low transition of **SCL**

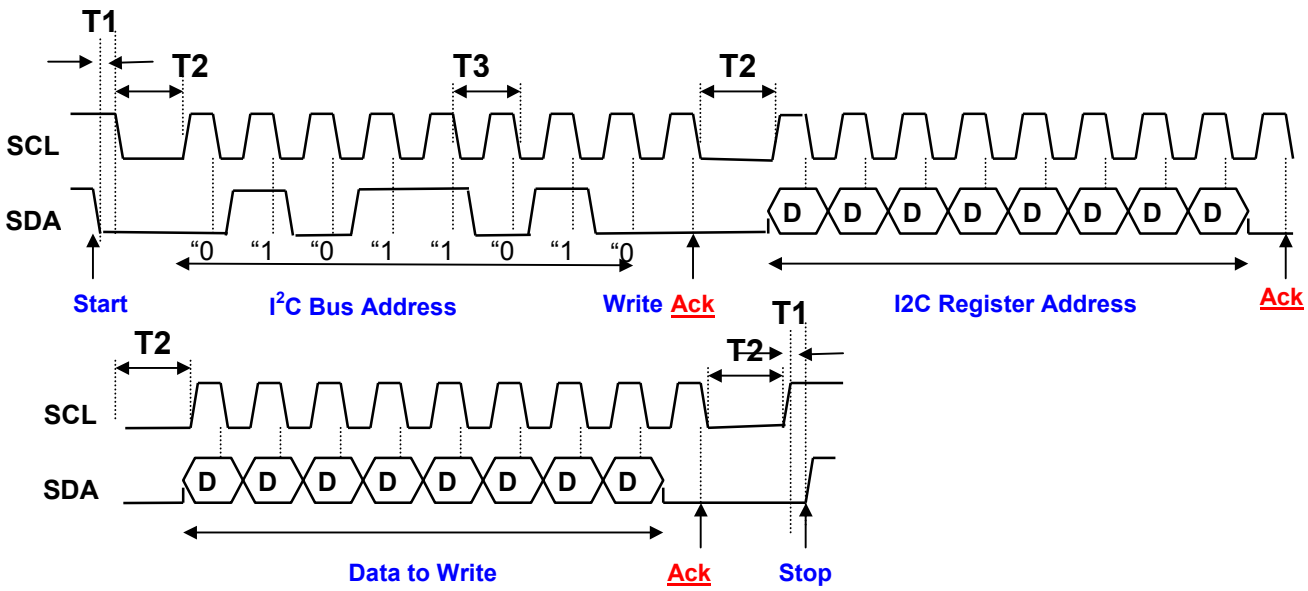

I²C Bus Write Cycle

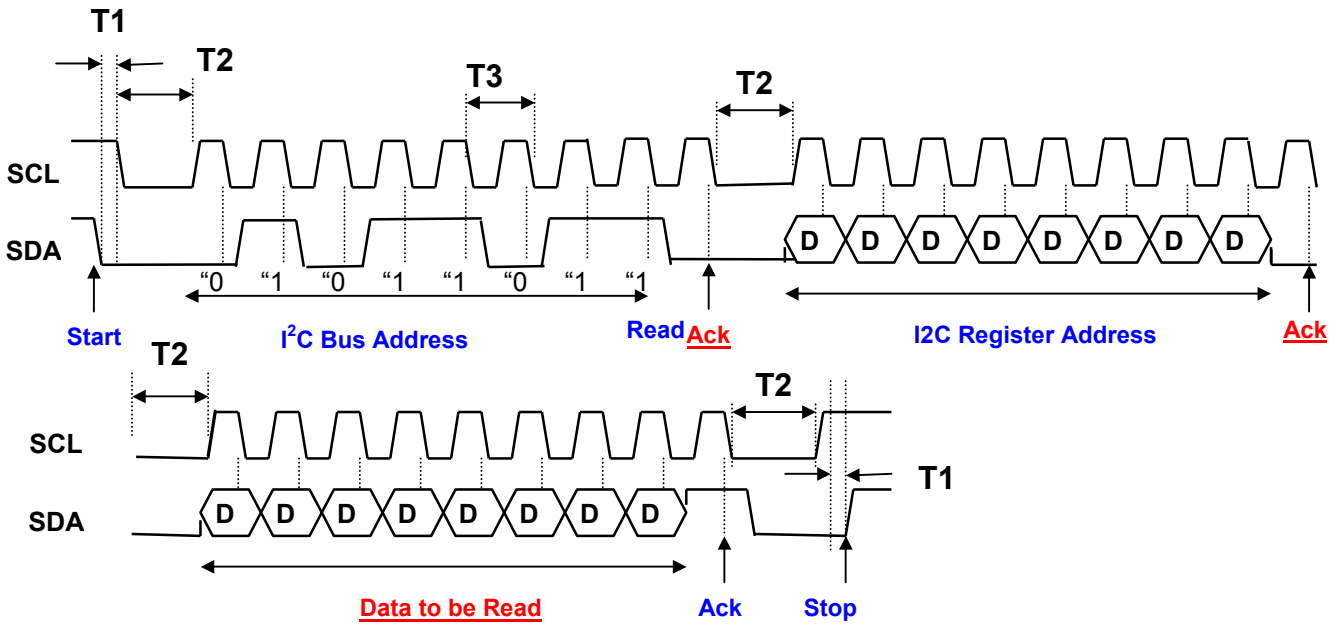

I²C Bus Read Cycle

Note

1. The basic frequency of main clock is 13.5MHz for all of the followed comments
2. If you don't have Ack signal on the way of communications through I2C, it means that I2C error is generated
3. If you have any I2C error, try again after 133msec.

   (The I2C error is reset every 133msec automatically)
4. If any error is not generated till one command is completed, you can transfer another after 4 msec
5. I2C-Bus read format is different from I2C standard format.

Main Clock - 13.5MHz

Characteristic	Symbol	Condition	Min	Typ	Max	Unit
Clock frequency	f_{SCK}	-	-	-	10	kHz
Start/Stop Bit width	T1	-	-	10	32	usec
Byte to Byte interval	T2	-	100	100	-	usec
Clock Timing	T3	-	100	100	-	usec
Command Interval	Tcmd	-	4	4	-	msec
Pull-up resistor	R_{PU}	SCL, SDA to V_{DD}	1.5	-	10	kΩ

STANBY MODE

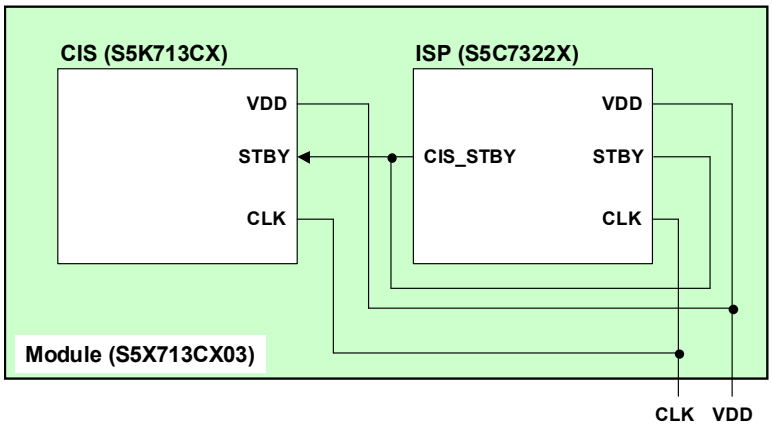

1) Stand_by Mode

When I2C Stanby_mode Command [Command List 0x71] was set, it triggers CIS Stand_By Pin to "LOW" automatically after 3V-sync timing.

Then, Master MCU must be not providedCLK for sensor.

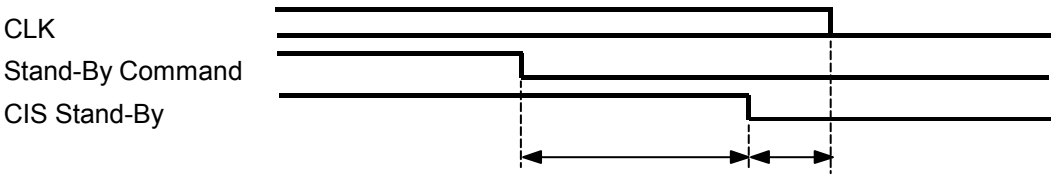

Less than 3 V-sync more than 2 V-sync
(200 mSec) (134 mSec)

2) Power On

At First, Master MCU is provided CLK for sensor.

Then, Master MCU sets Reset Pin to “HIGH”.

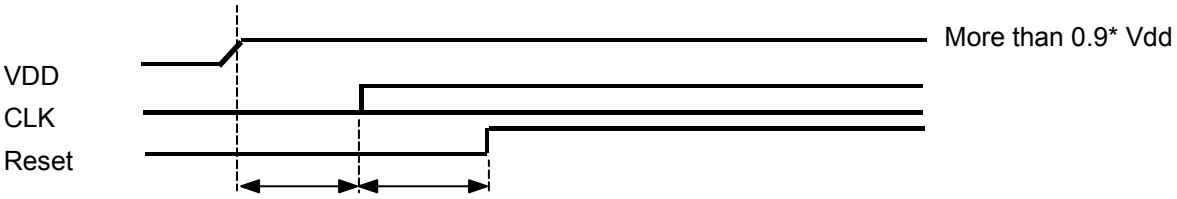

10uSec more than 5CLK

I²C REGISTER MAP

Address	Chip ID	Item
0x00 – 0x2B	CIS [0x00-0x2B]	CIS
0x2C	EEPROM CHECK	F0h
0x2D	EEPROM CHECK	F1h
0x2E	EEPROM CHECK	F2h
0x2F	EEPROM CHECK	F3h
0x30 – 0x70	CALM [0x00 – 0x4F]	PROGRAM CONSTANT
0x71 – 0x7F		COMMAND LIST
0x80 – 0xFF	ISP [0x00 – 0x7F]	ISP

MODULE REGISTER MAP

CIS CONTROL REGISTER MAP

Address	Control Register	Bits	Descriptions	Default
00h	sckinv	[5]	(Factory use only) Column color inversion	01h
	idinv	[4]	(Factory use only) Line color inversion	
	bprm	[3]	Bad pixel replacement mode 0b: disabled (default), 1b: enabled	
	dlcm	[2]	Dark level compensation mode 0b: manual (default), 1b: auto	
	ccsm	[1]	Color channel separation mode 0b: not separated (default), 1b: separated	
	shutc	[0]	Electronic shutter mode 0b: disabled (default), 1b: enabled	
01h	mircv	[7]	Vertical mirror control 0b: normal (default), 1b: mirrored	E0h
	mirch	[6]	Horizontal mirror control 0b: normal (default), 1b: mirrored	
	mcdiv	[5:4]	Main clock divider 00b: DCLK=MCLK, 01b: DCLK=MCLK2 (default) 10b: DCLK=MCLK4, 11b: DCLK=MCLK8	
	subsr	[3:2]	Row subsampling mode 00b: disabled (default), 01b: 2X, 10b: 3X, 11b: 4X	
	subsc	[1:0]	Column subsampling mode 00b: disabled (default), 01b: 2X, 10b: 3X, 11b: 4X	
02h	wrp_high	[0]	Row start point for window of interest	00h
03h	wrp_low	[7:0]	Row start point for window of interest	2Eh
04h	wcp_high	[0]	Column start point for window of interest	00h
05h	wcp_low	[7:0]	Column start point for window of interest	0Eh
06h	wrd_high	[0]	Row depth for window of interest	01h
07h	wrd_low	[7:0]	Row depth for window of interest	28h
08h	wcw_high	[1:0]	Column width for window of interest	01h
09h	wcw_low	[7:0]	Column width for window of interest	64h
0Ah	offsdef	[7:0]	(Factory use only) Analog offset reference	80h
0Bh	sfcen	[3]	Single frame capture enable 0b: disabled (default), 1b: enabled	01h
	sint_high	[2:0]	Integration time in single frame capture mode	
0Ch	sint_low	[7:0]	Integration time in single frame capture mode	8Fh
0Dh	cintr_high	[3:0]	Row-step integration time in continuous frame capture mode	01h
0Eh	cintr_low	[7:0]	Row-step integration time in continuous frame capture mode	20h
0Fh	cintc_high	[4:0]	Column-step integration time in continuous frame capture mode	01h
10h	cintc_low	[7:0]	Column-step integration time in continuous frame capture mode	FFh
11h	vswd	[7:0]	VSYNC width	02h
12h	vspolar	[5]	VSYNC polarity 0: active high (default), 1: active low	00h
	vsdisp	[4]	VSYNC display mode 0: sync mode (default), 1: data valid mode	
	vsstrt_high	[1:0]	VSYNC start position	
13h	vsstrt_low	[7:0]	VSYNC start position	00h
14h	vblank_high	[3:0]	Vertical blank depth	00h
15h	vblank_low	[7:0]	Vertical blank depth	E5h
16h	hswd	[7:0]	HSYNC width	20h
17h	hspolar	[5]	HSYNC polarity 0: active high (default), 1: active low	00h
	hsdisp	[4]	HSYNC display mode 0: sync mode (default), 1: data valid mode	
	hsstart_high	[1:0]	HSYNC start position	
18h	hsstart_low	[7:0]	HSYNC start position	00h

Address	Control Register	Bits	Descriptions	Default
19h	hblank_high	[5:0]	Horizontal blank depth	00h
1Ah	hblank_low	[7:0]	Horizontal blank depth	48h
1Bh	sgg1	[3:0]	1st sectional global gain	77h
	sgg2	[7:4]	2nd sectional global gain	
1Ch	sgg3	[3:0]	3rd sectional global gain	77h
	sgg4	[7:4]	4th sectional global gain	
1Dh	pgcr	[6:0]	Red channel gain	00h
1Eh	pgcg1	[6:0]	Green(Red row) channel gain or all channel gain (ccsm=0) pgcg1[6:0] = 0d (default)	00h
1Fh	pgcg2	[6:0]	Green(Blue row) channel gain	00h
20h	pgcb	[6:0]	Blue channel gain	00h
21h	offsr	[7:0]	Red channel analog offset	80h
22h	offsg1	[7:0]	Green(Red row) channel analog offset or all channel offset (ccsm=	80h
23h	offsg2	[7:0]	Green(Blue row) channel analog offset	80h
24h	offsb	[7:0]	Blue channel analog offset	80h
25h	pthresh	[7:0]	Bad pixel threshold	14h
26h	adcoffs	[7:0]	ADC offset	05h
27h	clipen	[4]	(Factory use only) Reset clipping enable	00h
	p12stp	[3:0]	(Factory use only) P12 start control	
28h	stbystrt	[7:5]	(Factory use only) Stand-by start	41h
	stbystp	[4:0]	(Factory use only) Stand-by stop	
29h	rxstrt	[7:0]	(Factory use only) Reset start control	00h
30h	blank	[7:0]	Blank register for general purpose	00h
2Bh	vtest	[3]	(Factory use only) Vertical function test mode	02h
	htest	[2]	(Factory use only) Horizontal function test mode	
	i2ctest	[1]	(Factory use only) IIC test mode	
	nandtree	[0]	(Factory use only) NAND tree test mode	

CALM CONTROL REGISTER MAP

Address	Control Register	Bits	Descriptions	Default
30h	WBMODE	[7:0]	00h : AWB auto mode 01h : Indoor 3100 mode 02h : Outdoor 5100 mode 03h : Indoor 2000 mode 04h : AE/AWB halt	00h
31h	WB_Yellow_tr	[7:0]	Distance Values Of Yellow Decision	0Ah
32h	WB_PIXEL_CNT	[7:0]	Pixel Minimum Counter Values Of White Detection	80h
33h	WB8000	[7:0]	AWB Tracking Boundary Constant	70h
34h	Rgain_Max	[7:0]	AWB Tracking Boundary Constant	30h
35h	Bgain_Max	[7:0]	AWB Tracking Boundary Constant	48h
36h	R_LimitHigh	[7:0]	AWB Tracking Boundary Constant	05h
37h	B_LimitHigh	[7:0]	AWB Tracking Boundary Constant	05h
38h	R_LimitLow	[7:0]	AWB Tracking Boundary Constant	05h
39h	B_LimitLow	[7:0]	AWB Tracking Boundary Constant	08h
3Ah	SlopeBottom	[7:0]	AWB Tracking Boundary Constant	0Ah
3Bh	SlopeTop	[7:0]	AWB Tracking Boundary Constant	0Ah
3Ch	Ydepth	[7:0]	Y_Depth Values Of White Detection	10h
3Dh	Y_Max	[7:0]	Y Max level Limit Values Of White Detection	C0h
3Eh	Y_Min	[7:0]	Y Min level Limit Values Of White Detection	60h
3Fh	Shutter_TR	[7:0]	Shutter Values Of AWB Tracking	80h
40h	WBR2000	[7:0]	Indoor 2000 R	1Eh
41h	WBB2000	[7:0]	Indoor 2000 B	40h
42h	WBR3100	[7:0]	Indoor 3100 R	23h
43h	WBB3100	[7:0]	Indoor 3100 B	39h
44h	WBR5100	[7:0]	Outdoor 5100 R	2Bh
45h	WBB5100	[7:0]	Outdoor 5100 B	32h
46h	BLANK			00h
47h	OUTDOOR_CINTCAE	[7:0]	BIT0: CINTC Shutter On (1:On 0:Off) BIT1: AWB Tracking Compare with AE (1:On 0:Off) BIT2: Max AE Expand (1:On 0:Off)	07h
48h	R-Y POSI GAIN(2000)	[7:0]	R-Y Positive Gain Coefficient of R-Y Signal(2000)	B0h
49h	R-Y NEGA GAIN(2000)	[7:0]	R-Y Negative Gain Coefficient of R-Y Signal(2000)	B0h
4Ah	R-Y HUE POSI GAIN(2000)	[7:0]	R-Y Positive Hue Coefficient of R-Y Signal(2000)	90h
4Bh	R-Y HUE NEGA GAIN(2000)	[7:0]	R-Y Negative Hue Coefficient of R-Y Signal(2000)	10h
4Ch	B-Y POSI GAIN(2000)	[7:0]	B-Y Positive Gain Coefficient of B-Y Signal(2000)	50h
4Dh	B-Y NEGA GAIN(2000)	[7:0]	B-Y Negative Gain Coefficient of B-Y Signal(2000)	90h
4Eh	B-Y HUE POSI GAIN(2000)	[7:0]	B-Y Positive Hue Coefficient of B-Y Signal(2000)	40h
4Fh	B-Y HUE NEGA GAIN(2000)	[7:0]	B-Y Negative Hue Coefficient of B-Y Signal(2000)	2Ch
50h	R-Y POSI GAIN(INDOOR)	[7:0]	R-Y Positive Gain Coefficient of R-Y Signal(INDOOR)	B0h
51h	R-Y NEGA GAIN(INDOOR)	[7:0]	R-Y Negative Gain Coefficient of R-Y Signal(INDOOR)	B0h
52h	R-Y HUE POSI GAIN(INDOOR)	[7:0]	R-Y Positive Hue Coefficient of R-Y Signal(INDOOR)	B8h
53h	R-Y HUE NEGA GAIN(INDOOR)	[7:0]	R-Y Negative Hue Coefficient of R-Y Signal(INDOOR)	20h
54h	B-Y POSI GAIN(INDOOR)	[7:0]	B-Y Positive Gain Coefficient of B-Y Signal(INDOOR)	50h
55h	B-Y NEGA GAIN(INDOOR)	[7:0]	B-Y Negative Gain Coefficient of B-Y Signal(INDOOR)	90h
56h	B-Y HUE POSI GAIN(INDOOR)	[7:0]	B-Y Positive Hue Coefficient of B-Y Signal(INDOOR)	40h
57h	B-Y HUE NEGA GAIN(INDOOR)	[7:0]	B-Y Negative Hue Coefficient of B-Y Signal(INDOOR)	2Ch
58h	R-Y POSI GAIN(OUTDOOR)	[7:0]	R-Y Positive Gain Coefficient of R-Y Signal(OUTDOOR)	B0h
59h	R-Y NEGA GAIN(OUTDOOR)	[7:0]	R-Y Negative Gain Coefficient of R-Y Signal(OUTDOOR)	B0h
5Ah	R-Y HUE POSI GAIN(OUTDOOR)	[7:0]	R-Y Positive Hue Coefficient of R-Y Signal(OUTDOOR)	EAh
5Bh	R-Y HUE NEGA GAIN(OUTDOOR)	[7:0]	R-Y Negative Hue Coefficient of R-Y Signal(OUTDOOR)	30h
5Ch	B-Y POSI GAIN(OUTDOOR)	[7:0]	B-Y Positive Gain Coefficient of B-Y Signal(OUTDOOR)	50h
5Dh	B-Y NEGA GAIN(OUTDOOR)	[7:0]	B-Y Negative Gain Coefficient of B-Y Signal(OUTDOOR)	80h
5Eh	B-Y HUE POSI GAIN(OUTDOOR)	[7:0]	B-Y Positive Hue Coefficient of B-Y Signal(OUTDOOR)	40h
5Fh	B-Y HUE NEGA GAIN(OUTDOOR)	[7:0]	B-Y Negative Hue Coefficient of B-Y Signal(OUTDOOR)	2Ch

Address	Control Register	Bits	Descriptions	Default
60h	Sensor	[7:0]	BIT[2:0]: SENSOR SIZE 0 - VGA (640 x 480) 5 - CIF (352 x 288) BIT3: VCK_INV BIT4: STRB Low	05h
61h	Alpha_AEWindow	[7:0]	Weighting Values Of AE Center Window	02H
62h	AESUM_80	[7:0]	YGain Graph constant	50h
63h	AESUM_50	[7:0]	YGain Graph constant	32h
64h	AESUM_30	[7:0]	YGain Graph constant	1Eh
65h	IIC Speed Register	[7:0]	bRegIICPS	80h
66h	Gain R	[7:0]	Read Only	R
67h	Gain B	[7:0]	Read Only	R
68h	DCLP_1	[7:0]	Output First Values Of DCLMP Function	00h
69h	DCLP_2	[7:0]	Output Second Values Of DCLMP Function	00h
6Ah	DCLP_max	[7:0]	Output Third Values Of DCLMP Function	00h
6Bh	YGAIN_max	[7:0]	Output Max Values Of Y_Gain Function	E0h
6Ch	AeTarget_Low	[7:0]	AE Target Low	A0h
6Dh	AeTarget_High	[7:0]	AE Target High	01h
6Eh	Shutter_Inc	[7:0]	Adaptive Shutter Control Values	18h
6Fh	Shutter_Stable_Range	[7:0]	Stable Decision Values Of Shutter	30h
70h	OutDoorInput	[7:0]	AE/AWB Outdoor Initial Setting(00h:SET)	FFh
71h	Stanby_Mode	[7:0]	AAh :Stand-by Mode On Others : Nothing	00h
72h	Main Clock	[7:0]	00h : 27Mhz 01h : 13.5Mhz Others : Main Clock integer Ex) 24Mhz 240(dec) => F0h	01h
73h	Frame Rate	[1:0]	BIT0 : 0 Frame AE Mode Off 1 Frame AE Mode On BIT1 : 0 30 frame 1 15 frame	00h
74h	BLANK			00h
75h	Mirror	[2:0]	01h-Vertical mirror 02h-Horizontal mirror 03h-Symmetric mirror 04h-right_bottom 05h-left_top(default) 06h-left_bottom 07h-right_top	00h
76h	Brightness	[7:0]	00h~7Fh	4Ah
77h	Color_Level	[5:0]	00h~64h	20h
78h	AGC_MAX	[5:0]	00h~20h	1Ch
79h	WhiteBalance R Control	[7:0]	80h~7Fh (-128~127)	00h
7Ah	WhiteBalance B Control	[7:0]	80h~7Fh (-128~127)	00h
7Bh	AE,AWB Program Speed	[7:0]	00h(Fastest) ~ FEh(Slowest) FFh : AE, AWB Skip	00h
7Ch	AWB Tracking Speed	[7:0]	AWB Execution Values Per Vsync	04h
7Dh	AE Tracking SPEED	[7:0]	AE Execution Values Per Vsync	00h
7Eh	Digital Clamp,Y_gain	[1:0]	bit0 : 0 - Digital Clamp Off 1 - Digital Clamp On bit1 : 0 - Y_gain Off 1 - Y_gain On	03h
7Fh	Factory Use	[7:0]	00h : Indoor R,B SAVE 01h : Outdoor R,B SAVE 02h : 2000 R,B SAVE 05h : CIF setting 06h : VGA setting	FFh

ISP CONTROL REGISTER MAP

Address	Control Register	Bits	Descriptions	Default
80h	Timing Generator Command	[4]	CIS Input Signal Invert('0':Normal'1':Invert)	33h
		[3]	VSYNC Output Signal Invert('0':Normal'1':Invert)	
		[2]	HSYNC Output Signal Invert('0':Normal'1':Invert)	
		[1]	VSYNC Input Signal Invert('0':Normal'1':Invert)	
		[0]	HSYNC Input Signal Invert('0':Normal'1':Invert)	
81h	PREPROCESS Command	[6:5]	Horizontal Mirror Mode Delay Adjustment Of CIS	00h
		[4:3]	AD Delay Adjustment	
		[2]	Digital Clamp On('0':OFF,'1':ON)	
		[1]	PREPROCESS Test Mode('0':OFF,'1':ON)	
		[0]	White Defect Correction('0': OFF,'1':ON)	
82h	Digital Clamp Offset	[7:0]	Offset Values	00h
83h-87h	BLANK			00h
88h	Detection Window Horizontal Start	[7:0]	Horizontal Start Point For Window Of White Defection	14h
89h	Detection Window Horizontal End	[7:0]	Horizontal End Point For Window Of White Defection	82h
8Ah	Detection Window Vertical Start	[7:0]	Vertical Start Point For Window Of White Defection	03h
8Bh	Detection Window Vertical End	[7:0]	Vertical End Point For Window Of White Defection	64h
8Dh	Horizontal Clamp Start	[7:0]	Horizontal Start Point For Window Of Optical Black	00h
8Eh	Vertical Clamp Start	[7:0]	Vertical Start Point For Window Of Optical	00h
8Fh	Defect Threshold	[7:0]	Threshold Values For Detection Of White Defect	3Ch
90h	Formatter Command	[3:2]	00 : ITU.R-656 Format (YCrCb) 01 : ITU.R-601 Format(YCrCb) 10 : R/G/B Data 11 : CIS Raw Data	02h
		[1]	0 : Y First (Y/Cb/Y/Cr) 1 : C First (Cb/Y/Cr/Y)	
		[0]	0 : Cb or R First (Y/Cb/Y/Cr or R/G/B) 1 : Cr or B First (Y/Cr/Y/Cb or B/G/R)	
91h	RGB Matrix Control	[7]	Black and White CIS Mode 0: Color CIS 1: B/W CIS	11h
		[6]	Selection of RGB Interpolation 0: Adaptive 1: Linear	
		[5]	Gamma Point Correction 0:16Point 1:8Point	
		[4]	Control of CIS Horizontal Data Arrangement 0: R/G/R/G or G/B/G/B 1: G/R/G/R or B/G/B/G	
		[3]	Control of CIS Vertical Data Arrangement 0: R/G/R/G or G/B/G/B 1: G/R/G/R or B/G/B/G	
		[2:0]	Color Suppress Coefficient Of Delay Adjustment 000: 0CK Delay 001: 1CK Delay 010: 2CK Delay 011: 3CK Delay 100: -4CK Delay 101: -3CK Delay 110: -2CK Delay 111: -1CK Delay	
92h	Horizontal Correlation Threshold	[7:0]	Horizontal Correction Values of Adaptive Interpolation	05h
93h	Vertical Correlation Threshold	[7:0]	Vertical Correction Values of Adaptive Interpolation	05h
94h	R Gain for R Color Correction	[7:0]	R Gain Values of R Signal Color Correction	80h
95h	G Gain for R Color Correction	[7:0]	G Gain Values of R Signal Color Correction	0Dh
96h	B Gain for R Color Correction	[7:0]	B Gain Values of R Signal Color Correction	00h
97h	R Gain for G Color Correction	[7:0]	R Gain Values of R Signal Color Correction	0Dh
98h	G Gain for G Color Correction	[7:0]	G Gain Values of R Signal Color Correction	80h
99h	B Gain for G Color Correction	[7:0]	B Gain Values of R Signal Color Correction	00h
9Ah	R Gain for B Color Correction	[7:0]	R Gain Values of R Signal Color Correction	00h
9Bh	G Gain for B Color Correction	[7:0]	G Gain Values of R Signal Color Correction	26h
9Ch	B Gain for B Color Correction	[7:0]	B Gain Values of R Signal Color Correction	80h
9Dh	R Coefficient for Y Signal	[7:0]	R Coefficient of Y Signal Generation	4Ch
9Eh	G Coefficient for Y Signal	[7:0]	G Coefficient of Y Signal Generation	98h

Address	Control Register	Bits	Descriptions	Default
9Fh	B Coefficient for Y Signal	[7:0]	B Coefficient of Y Signal Generation	1Ch
A0h	High-Light Color Suppress Reference	[7:0]	High-Light Color Suppress Reference	A0h
A1h	Edge Color Suppress Reference	[7:0]	Edge Color Suppress Reference	20h
A2h	High-Light Color Suppress Gain	[5]	High-Light Color Suppress Selection	28h
		[4:0]	High-Light Color Suppress Gain	
A3h	Edge Color Suppress Gain	[5]	Edge Color Suppress Selection	28h
		[4:0]	Edge Color Suppress Gain	
A4h	Gamma Value 1	[7:0]	GM1 Values[7:0]	10h
A5h	Gamma Value 2	[7:0]	GM2 Values[7:0]	3Ch
A6h	Gamma Value 3	[7:0]	GM3 Values[7:0]	65h
A7h	Gamma Value 4	[7:0]	GM4 Values[7:0]	A3h
A8h	Gamma Value 5	[7:0]	GM5 Values[7:0]	FFh
A9h	Gamma Value 6	[7:0]	GM6 Values[7:0]	90h
AAh	Gamma Value 7	[7:0]	GM7 Values[7:0]	87h
ABh	Gamma Value 8	[7:0]	GM8 Values[7:0]	C0h
ACh	Gamma Value 1234	[7:6]	GM1 Values[9:8]	00h
		[5:3]	GM2 Values[9:8]	
		[3:2]	GM3 Values[9:8]	
		[1:0]	GM4 Values[9:8]	
ADh	Gamma Value 5678	[7:6]	GM1 Values[9:8]	1Bh
		[5:3]	GM2 Values[9:8]	
		[3:2]	GM3 Values[9:8]	
		[1:0]	GM4 Values[9:8]	
AEh	Pattern Selection	[5:4]	00:CIS Pattern 01:Color Bar Pattern 10:Ramp Pattern 11:Blue Screen Pattern	00h
AFh	BLANK			00h
B0h	R Dark Slice	[7:0]	Dark Slice Values of R Signal	00h
B1h	B Dark Slice	[7:0]	Dark Slice Values of B Signal	00h
B2h	G Dark Slice	[7:0]	Dark Slice Values of G Signal	00h
B3h	RB White Balance	[3:2]	White Balance Coefficient of R Signal[9:8]	00h
		[1:0]	White Balance Coefficient of B Signal[9:8]	
B4h	R White Balance	[7:0]	White Balance Coefficient of R Signal[7:0]	20h
B5h	B White Balance	[7:0]	White Balance Coefficient of B Signal[7:0]	20h
B6h	G White Balance	[7:0]	White Balance Coefficient of G Signal	48h
B7h	(R-G) Gain Control for (R-Y)	[7:0]	R-G Signal Coefficient of R-Y Signal Generation	59h
B8h	(B-G) Gain Control for (R-Y)	[7:0]	B-G Signal Coefficient of R-Y Signal Generation	F2h
B9h	(R-G) Gain Control for (B-Y)	[7:0]	R-G Signal Coefficient of B-Y Signal Generation	D9h
BAh	(B-G) Gain Control for (B-Y)	[7:0]	B-G Signal Coefficient of B-Y Signal Generation	72h
BBh	Horizontal Blank Rising Edge	[7:0]	Horizontal Blank Rising Edge Point Setting[7:0]	31h
BCh	Horizontal Blank Falling Edge	[7:0]	Horizontal Blank Falling Edge Point Setting[7:0]	91h
BDh	Vertical Blank Rising Edge	[7:0]	Vertical Blank Rising Edge Point Setting[7:0]	05h
BEh	Vertical Blank Falling Edge	[7:0]	Vertical Blank Falling Edge Point Setting[7:0]	25h
BFh	H/V Blank Rising/Falling Edge	[7:6]	HBLK_RE[9:8]	11h
		[5:4]	HBLK_FE[9:8]	
		[3:2]	VBLK_RE[9:8]	
		[1:0]	VBLK_FE[9:8]	
C0h	(R-Y) Positive Gain	[7:0]	R-Y Positive Gain Coefficient of R-Y Signal	6Ch
C1h	(R-Y) Negative Gain	[7:0]	R-Y Negative Gain Coefficient of R-Y Signal	6Ch
C2h	(R-Y) Positive Hue Control	[7:0]	R-Y Positive Hue Coefficient of R-Y Signal	0Ch
C3h	(R-Y) Negative Hue Control	[7:0]	R-Y Negative Hue Coefficient of R-Y Signal	2Ch
C4h	(B-Y) Positive Gain	[7:0]	B-Y Positive Gain Coefficient of B-Y Signal	55h
C5h	(B-Y) Negative Gain	[7:0]	B-Y Negative Gain Coefficient of B-Y Signal	5Bh
C6h	(B-Y) Positive Hue Control	[7:0]	B-Y Positive Hue Coefficient of B-Y Signal	00h
C7h	(B-Y) Negative Hue Control	[7:0]	B-Y Negative Hue Coefficient of B-Y Signal	00h
C8h	C Gain	[7:0]	Color Gain	80h
C9h	Hue Control	[0]	Hue Gain and Control Coefficient	00h
CAh-CFh	BLANK			

Address	Control Register	Bits	Descriptions	Default
D0h	Edge Enhancement Non-Linear Control	[7:6]	Vertical Edge Enhancement Non-Linear Control Threshold	AAh
		[5:4]	Vertical Edge Enhancement Non-Linear Control Gain	
		[3:2]	Horizontal Edge Enhancement Non-Linear Control Threshold	
		[1:0]	Vertical Edge Enhancement Non-Linear Control Gain	
D1h	Horizontal Edge Enhancement Control	[6:5]	High Frequency Edge Enhancement Filter Gain	50h
		[4:0]	Vertical Positive Edge Enhancement Gain	
D2h	Vertical Edge Enhancement Control	[6:5]	Low Frequency Edge Enhancement Filter Gain	50h
		[4:0]	Vertical Positive Edge Enhancement Gain	
D3h	H Edge Enhancement Negative Gain	[4:0]	Horizontal Negative Edge Enhancement Gain	10h
D4h	V Edge Enhancement Negative Gain	[4:0]	Vertical Negative Edge Enhancement Gain	10h
D5h	High-Light Enhancement	[7:0]	High-Light Enhancement Clip Level	0Ah
D6h	Y Edge Enhancement Clip	[7:0]	Edge Enhancement Clip Level	BFh
D7h	Y High-Light Enhancement Noise Slice	[5:0]	High-Light Enhancement Noise Slice Level	7Fh
D8h	Y Edge Enhancement Noise Slice	[4:0]	Edge Enhancement Noise Slice Level	00h
D9h	Detail Enhancer Threshold & Gain	[5:4]	Detail Enhancer Threshold	00h
		[1:0]	Detail Enhancer Gain	
DAh	High_Light Enhancement Gain	[4:0]	High_Light Enhancement Gain	10h
DBh	Y White Clip	[7:0]	Y White Clip Level	FFh
DCh	Y Gain	[7:0]	Y Gain	80h
DDh	Y Group Delay	[4]	AE/AWB Window Pulse Enable ('0':OFF,'1':ON)	11h
		[3]	Vertical Edge Enhancement Selection ('0':OFF,'1':ON)	
		[2:0]	Y/C Group Delay Match Adjust	
Deh-DFh	BLANK			00h
E0h	AE Window1 Horizontal Start	[7:0]	Horizontal Start Point of AE Window1	0Eh
E1h	AE Window1 Horizontal End	[7:0]	Horizontal End Point of AE Window1	70h
E2h	AE Window1 Vertical Start	[7:0]	Vertical Start Point of AE Window1	10h
E3h	AE Window1 Vertical End	[7:0]	Vertical End Point of AE Window1	6Bh
E4h	AE Window2 Horizontal Start	[7:0]	Horizontal Start Point of AE Window2	0Ah
E5h	AE Window2 Horizontal End	[7:0]	Horizontal End Point of AE Window2	70h
E6h	AE Window2 Vertical Start	[7:0]	Vertical Start Point of AE Window2	10h
E7h	AE Window2 Vertical End	[7:0]	Vertical End Point of AE Window2	8Bh
E8h	AWB Window Horizontal Start	[7:0]	Horizontal Start Point of AWB Window	10h
E9h	AWB Window Horizontal End	[7:0]	Horizontal End Point of AWB Window	6Dh
EAh	AWB Window Vertical Start	[7:0]	Vertical Start Point of AWB Window	10h
EBh	AWB Window Vertical End	[7:0]	Vertical End Point of AWB Window	76h
ECh~EFh	BLANK	[7:0]		00h
F0h	AE Y Signal High Threshold	[7:0]	High Threshold Values of Y Signal For AE	FFh
F1h	AE Y Signal Low Threshold	[7:0]	Low Threshold Values of Y Signal For AE	00h
F2h	AWB Y Signal High Threshold	[7:0]	High Threshold Values of Y Signal For AWB	F0h
F3h	AWB Y Signal Low Threshold	[7:0]	Low Threshold Values of Y Signal For AWB	40h
F4h	AE Clip Counter Threshold	[7:0]	Threshold Values of AE Clip Counter	78h
F5h	Optical Detector Command	[1:0]	AE/AWB Window Selection 00 : Nothing 01 : AE Window1 10 : AE Window2 11 : AWB Window	00h
F6h	Horizontal Sync Rising Edge	[7:0]	Horizontal Sync Rising Edge Setting [7:0]	30h
F7h	Horizontal Sync Falling Edge	[7:0]	Horizontal Sync Falling Edge Setting[7:0]	96h
F8h	Vertical Sync Rising Edge	[7:0]	Vertical Sync Rising Edge Setting [7:0]	05h
F9h	Vertical Sync Falling Edge	[7:0]	Vertical Sync Falling Edge Setting [7:0]	25h
FAh	H/V Sync Rising/Falling Edge	[7:6]	Horizontal Sync Rising Edge Setting [9:8]	11h
		[5:4]	Horizontal Sync Falling Edge Setting[9:8]	
		[3:2]	Vertical Sync Rising Edge Setting [9:8]	
		[1:0]	Vertical Sync Falling Edge Setting[9:8]	
FBh	Horizontal Counter End L	[7:0]	1H Sync Value Setting[7:0]	ABh
FCh	Horizontal Counter End H	[1:0]	1H Sync Value Setting[9:8]	01h
FDh	Line Memory Hold	[7:0]	Line Memory Hold Vertical Position[7:0]	00h
FEh	Line Memory Hold Enable	[2]	Line Memory Hold Enable(0 : OFF 1 : ON)	00h
		[1:0]	Line Memory Hold Vertical Position[9:8]	

Outline Dimension (unit = mm)

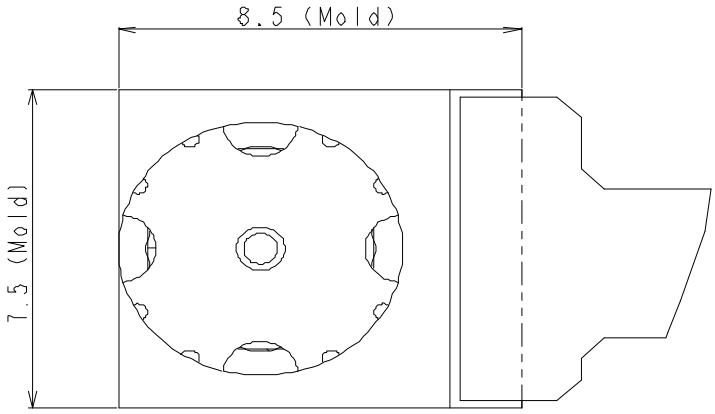

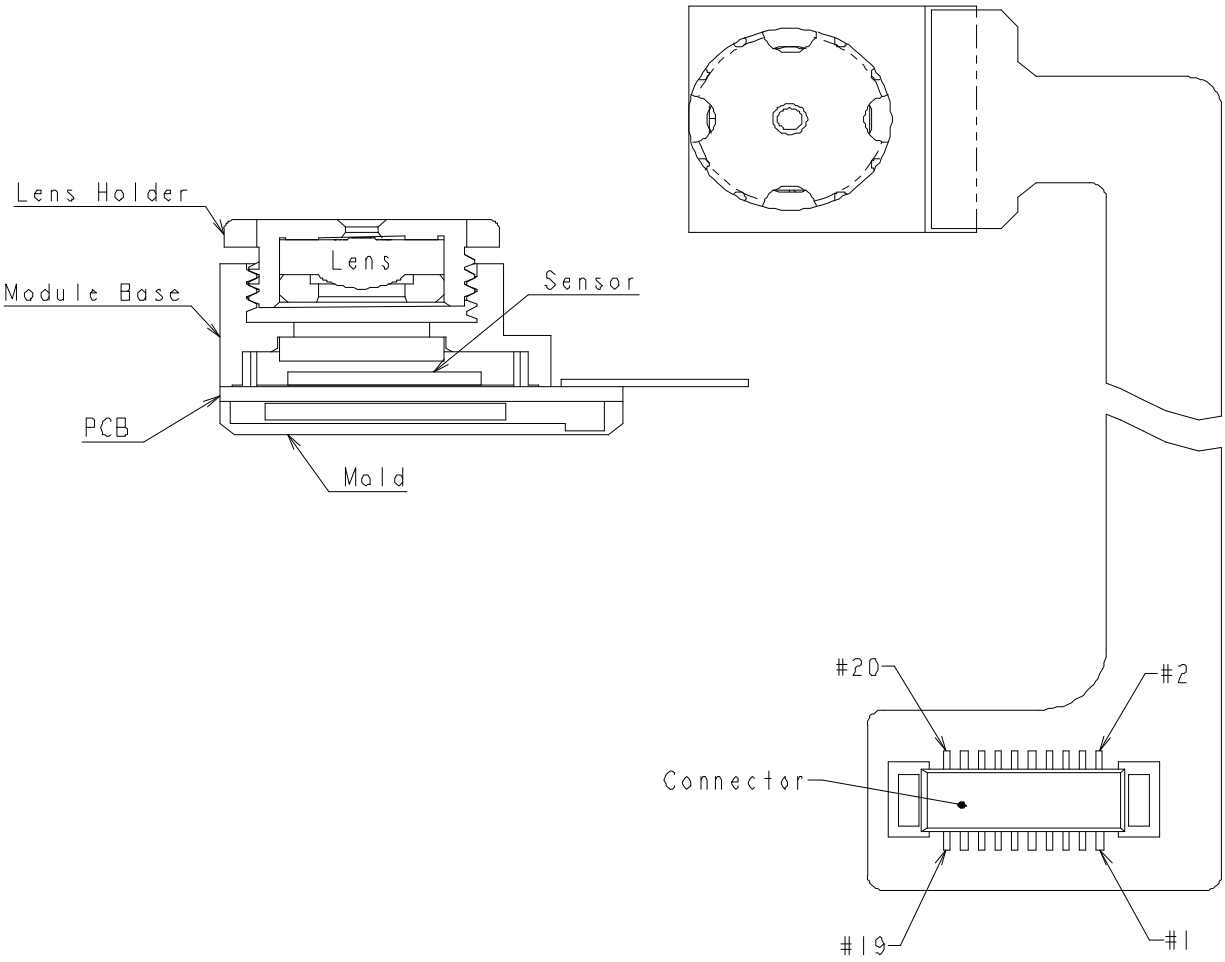

Mechanical Dimension (unit = mm)

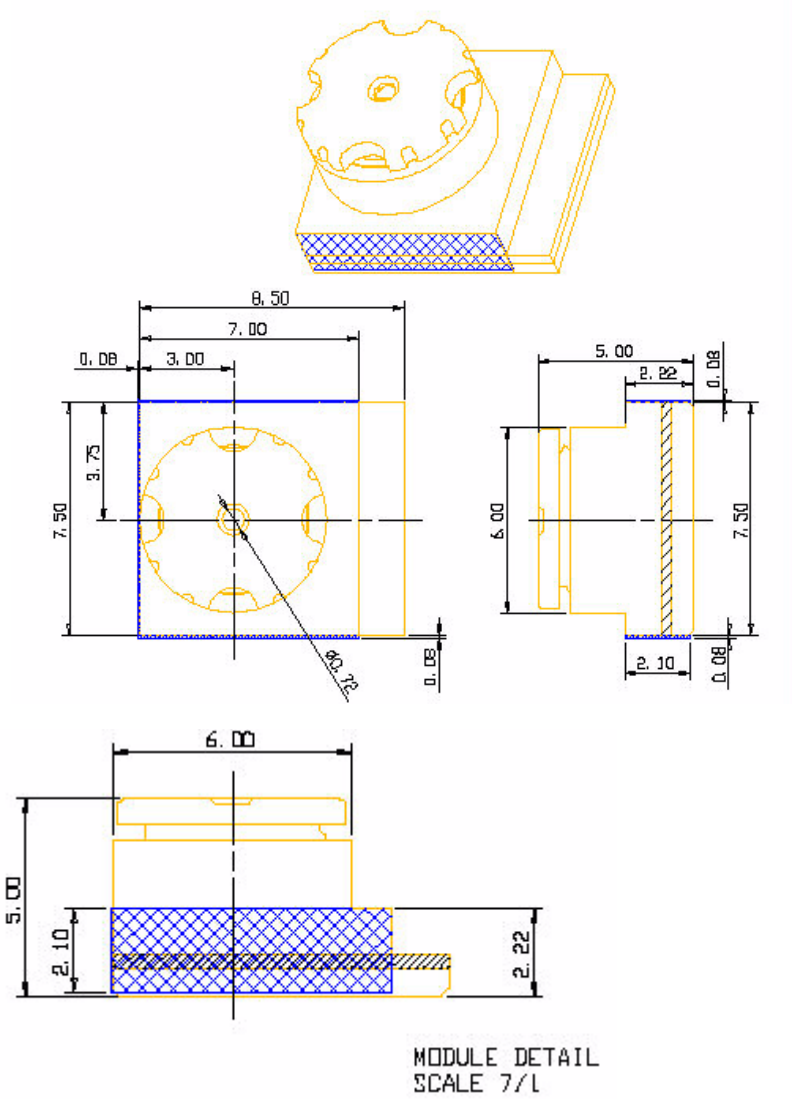

* NOTE

1. : Insulation Tape
   - Material : 3M 851
   - Thickness : 0.08~0.10mm
   - Width : 2.1mm
   - Length : 21.5mm
2. : Electric Conduction Tape
   - Maker : Hana Elecom Co. Ltd.
   - Thickness : 0.1mm (Ring Type)
   - Width : 4.0mm
   - Length : 7.0±0.3mm
3. General Tolerance : ±0.1

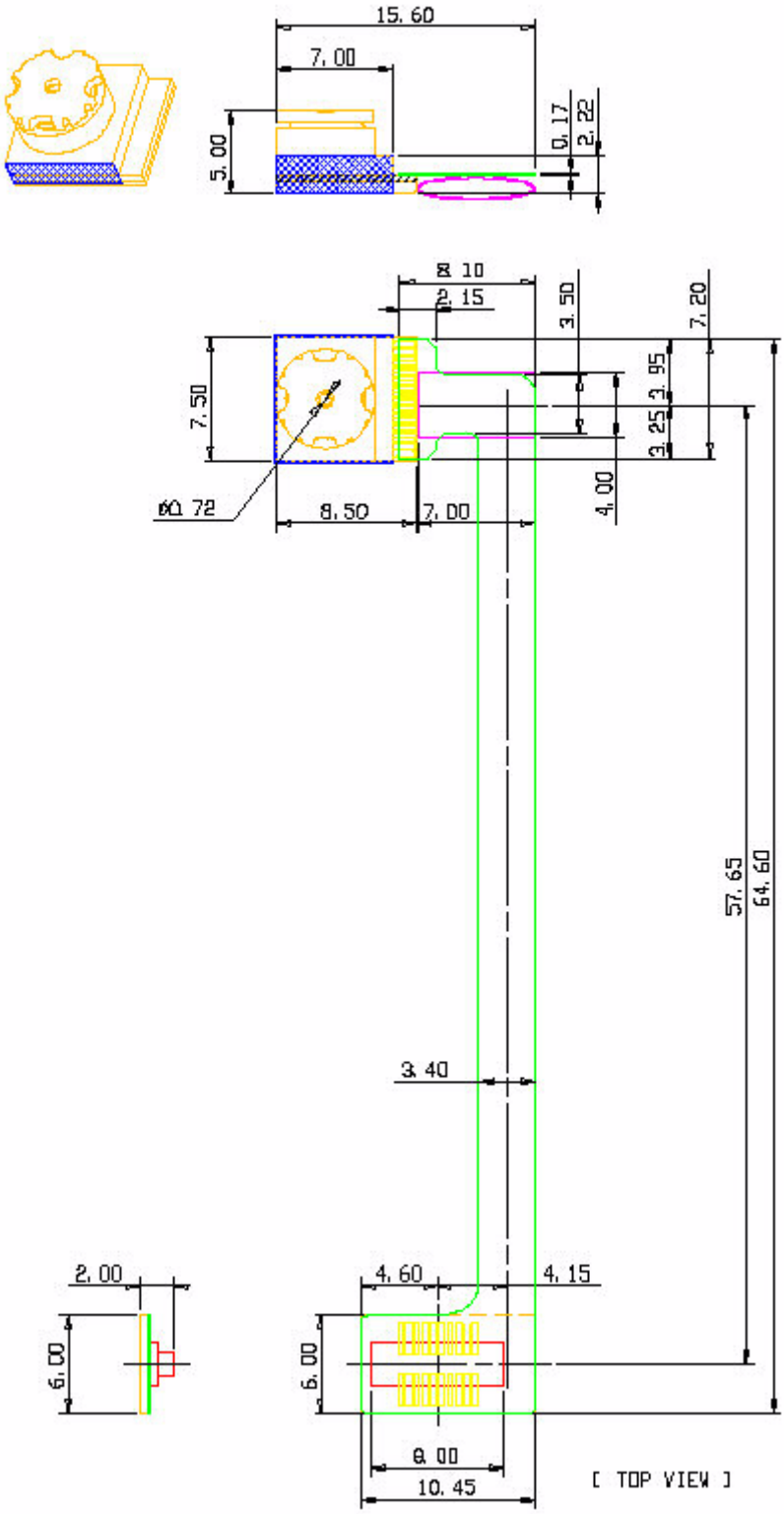
15.60
7.00
5.00
0.17
2.22
8.10
2.15
3.50
7.20
7.50
3.95
3.25
4.00
Ø0.72
8.50
7.00
57.65
64.60
3.40
2.00
6.00
4.60
4.15
6.00
8.00
10.45
[TOP VIEW]

Packing Specification

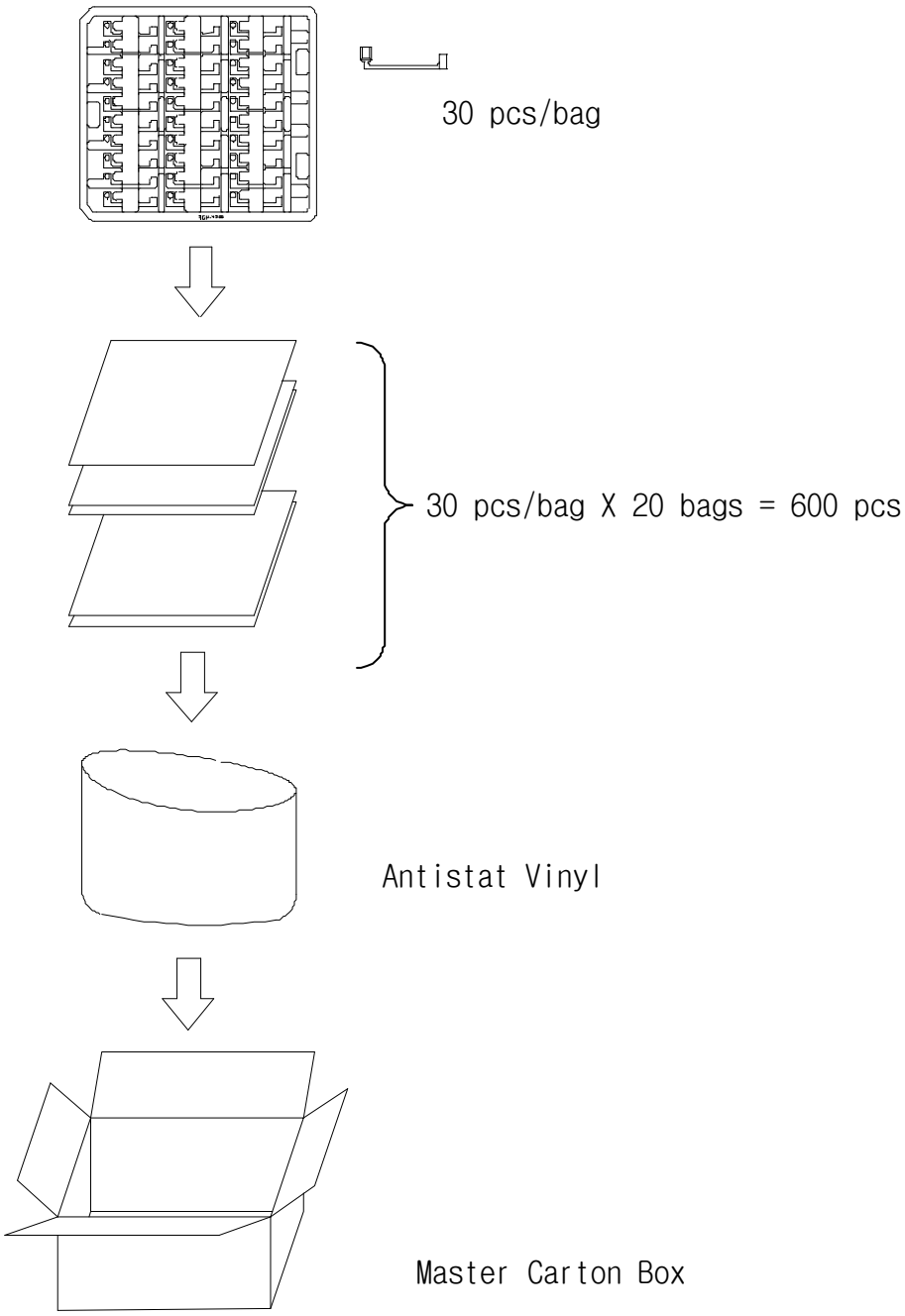

Marking Specification

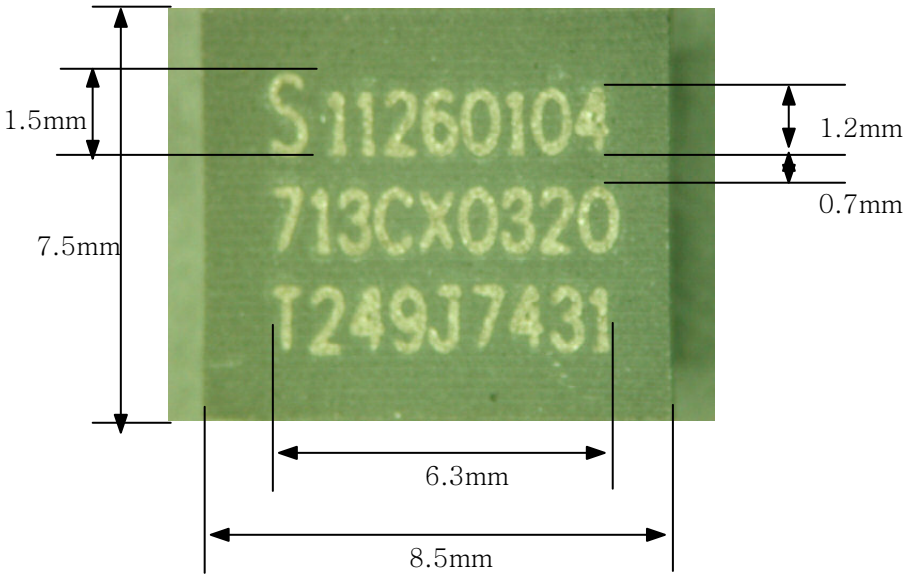

● Note

1. "S" : Samsung Logo.
2. "11260104 : CIS Lot NO.
3. "713CX03## : 713CX03 - Chip Product Name.
   ## - Chip Mask Option Code.
4. T : Assembly Site Code
5. YWW : Work Week Code
6. "XXXXX" : IC Lot No
7. Location : Center Alignment Of Package
8. Letter Size : Helvtica Regular(News Gothic)

ISOLATING TAPE SPECIFICATION

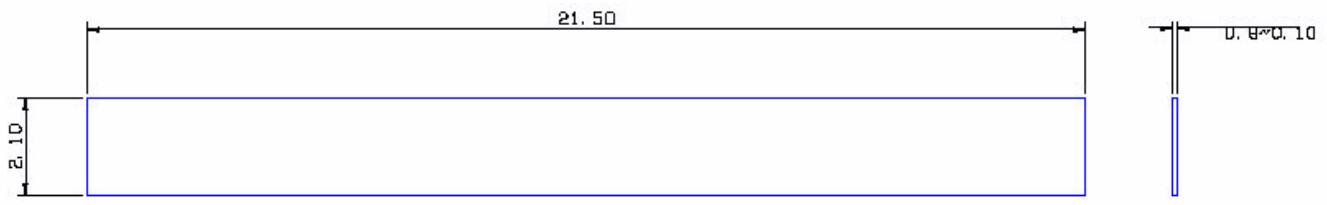

[Insulation Tape (Module)]

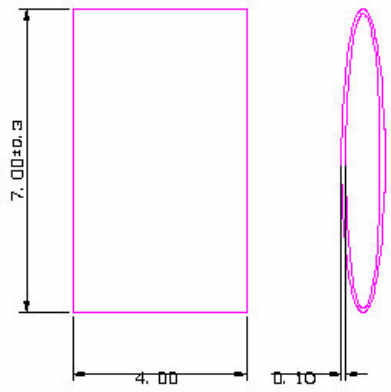

[Electric Conduction Tape (FPC)]

※ NOTE

1. ▭ : Insulation Tape
   - Material : 3M 851
   - Thickness : 0.08~0.10mm
   - Width : 2.1mm
   - Length : 21.5mm
2. ▭ : Electric Conduction Tape
   - Maker : Hana Elecom Co. Ltd
   - Thickness : 0.1mm (Ring Type)
   - Width : 4.0mm
   - Length : 7.0±0.3mm
3. General Tolerance : ±0.1