QProx™ QTM1001A

Charge Transfer ('QT') Sensor Module

The QProx™ QTM1001A is a highly sophisticated sensor module designed to be embedded into all types of applications. The unit is a "smart sensor" that performs a superset of the primary sensing functions found in the QProx E2S. It employs the superior charge transfer ("QT") method, and incorporates a unique feature "clone" method not found in any other sensor. The clone method permits the unit to have the high level of configurability found in the E2S, but without requiring an expensive operator interface. Cloned setups are stored permanently in an onboard e^2prom.

The unit is partially encapsulated for ruggedness and environmental resistance, and is fabricated with surface mount technology. Power, control, and signal wiring is accomplished via a commonly available card edge connector, or alternatively a user-supplied IDC connector. The signal wire may be separately connected via a 2-pin terminal if desired. The cloning adapter momentarily connects to a series of pads on one end of the unit to transfer the setups data.

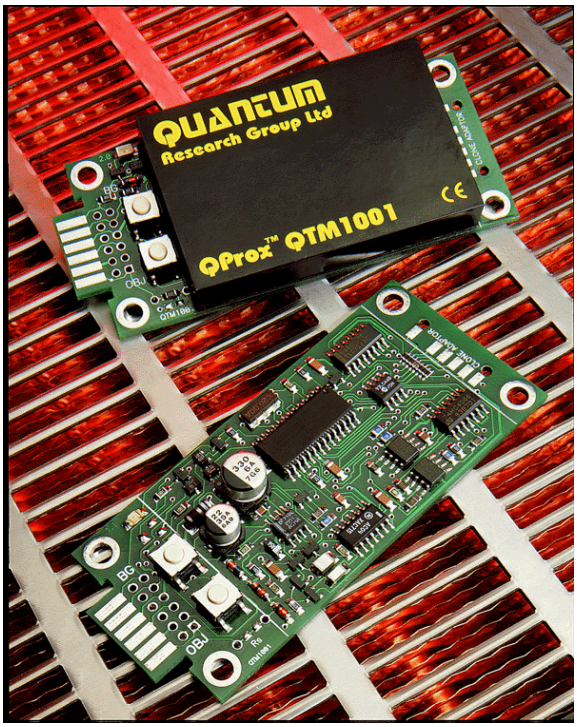

FEATURES

- **Burst mode charge transfer capacitance sensor**
- **Spread spectrum for interference-free operation**
- **680 attofarad per mV sensitivity (0.00068pF/mV)**
- **2,500pF load capacity**
- **Response time settable from 200µs to 100ms**
- **Variable transfer durations from 200ns to 1.4µs**
- **Automatic self-calibration and drift compensation**
- **Median and averaging digital filters**
- **Programmable sensitivity, burst timing, filtering, gain**
- **Post detection processing including event filtering**
- **Asymmetric threshold processing**
- **Internal setups can be 'cloned' from any QProx E2S for thousands of possible operating combinations**
- **Analog output, including processed, synthetic analog**
- **Optional HeartBeat™ indicator for critical applications**
- **NPN and PNP outputs available simultaneously**
- **Small, rugged package for environmental resistance**

The QProx™ QTM1001A offers a superset of functionality over the E2S development unit. A full discussion of operating modes can be found in the E2S user guide. Exceptions are the lack of a ratio mode and serial I/O. The unit includes the two pushbuttons found on the E2S, which are also replicated as input command pins on the connector; external switches or logic gates can be used to force the unit to self-calibrate in one of the BG/OBJ modes pioneered on the E2S board.

The QTM can include the groundbreaking HeartBeat™ option which monitors the internal health of the sensor, while also monitoring signal limits for electrode failure. HeartBeat provides a continuous sensor status check, including even the output transistor in its check path. HeartBeat permits the sensor to be used in critical applications with an extraordinary degree of confidence.

The QTM can discern mere femtofarads of change within a background level of hundreds of picofarads. It also allows the user to select from thousands of combinations of processing options. In addition to the QT effect's natural noise immunity, the QTM contains both linear and nonlinear filters plus a unique post detection event filter, any of which can be enabled or disabled. The QTM readily suppresses background capacitance caused by large sensing surfaces and the signal cable.

These characteristics permit the QTM to be connected to a wide variety of metal bearing surfaces or objects for prox detection or material analysis, even in hostile environments. It is sensitive enough that it can detect through substantial thicknesses of insulating material.

QUANTUM

SETUP CLONING

The QTM1001A employs a 6-place topside pad area on one end which interfaces momentarily to a special cloning adapter. The socketed e^2prom from the E2S is removed and inserted into this adapter, and the adapter's ATE-style “pogo" pins are momentarily mated with the module’s cloning pads while one of the QTM's buttons is pushed. Alignment pins help to facilitate this operation without error. The module reads the data from the E2S’ e^2prom and copies it into its own internal e^2prom, creating a sensor whose behavior is a ‘clone’ of the E2S.

Upon special request the clone settings can be preprogrammed into QTM's at the factory to save production effort; the user can still clone in different settings later to override these defaults at any time.

AUTO-LEARN MODE

The QTM can automatically ‘learn’ the signal required for a detection by simply presenting the object to be detected to the sense electrode and pushing a button, or by controlling one of the corresponding external inputs. The unit then permanently remembers the level required to create a trip point for the object presented. The QTM can also remember the level of quiescent background signal and change the detection trip point slowly over time as the local environment changes. This ‘drift compensation’ operates at a user settable rate which is set via the clone process.

VARIABLE GAIN AND OFFSET

Gain The QT effect allows for gain changing by altering the number of pulses in a burst. QTM supports this form of gain change by permitting from 4 to 64 pulses per burst. The QTM also has two selectable analog gain paths which allow for a 16x gain switch.

Offset Using a sophisticated subranging technique, the QTM processes any 8-bit subrange within a larger 16 bit range. Subranging allows the use of a simple, fast ADC; it is accomplished by using a DAC to control both charge cancellation and amplifier offset. During each burst, charge cancellation at the charge detector reduces the buildup of sampled charge and creates, in effect, a virtual summing junction. Offset is also performed at the amplifier to position the reference level at a specific point in the ADC’s range. Using these offset techniques, huge loads may be connected without affecting differential sensitivity. Gain and offset are both alterable via the clone process.

SPREAD SPECTRUM EFFECT

The QT method uses sparse pulses which occupy only a small percentage of time, spectral spreading emitted RFI thinly over a broad range. The device can also randomize burst positions to spectrally spread emitted energy density further, making it less likely the sensor can interfere with or be interfered by other systems, even other QT sensors. Emitted RFI is usually negligible, and can also be further reduced by adding a series resistor in the sense lead. The QTM has a board location to facilitate a user-added resistor.

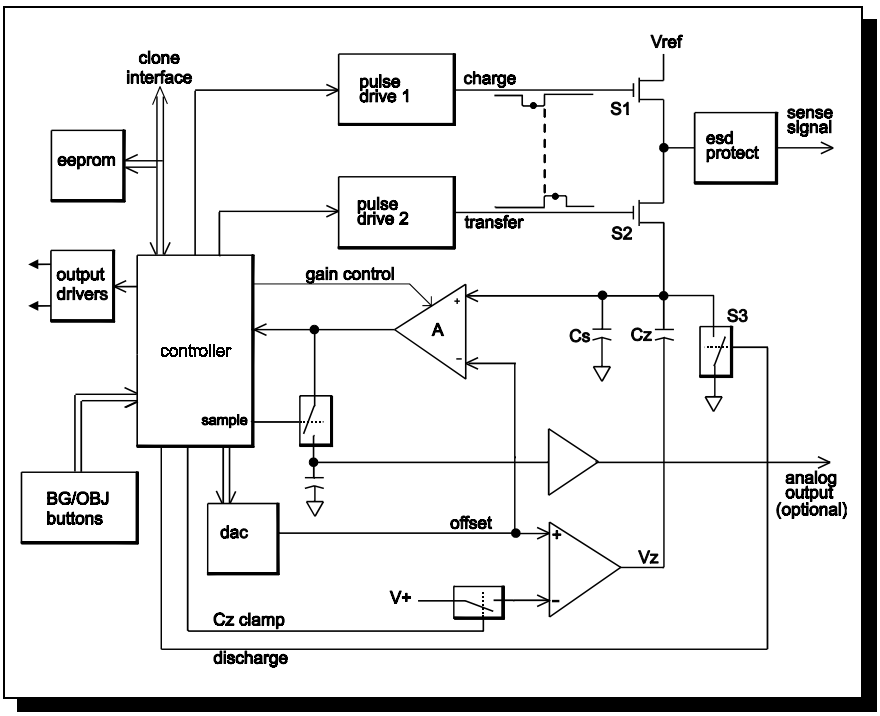

SIGNAL PROCESSING

Digital Filtering The QTM1001A contains two cascadable digital filters which may be individually enabled. The first is a median filter which is highly efficient at removing impulse noise. The second is a boxcar averager which is user-settable from 2 through 64 averages. Cascaded together the filters are extraordinarily good at removing all types of signal noise from various sources. Both filters are pipelined for optimal response time. The filtered analog signals can also be output onto the connector for external use if desired, in one of four different formats.

Event Criteria The QTM1001A will process signals to create an output when an event criteria is met. Criteria can include exceeding positive and/or negative signal thresholds, exceeding a rate of change of signal in either direction (motion detection), or sensing a detection for a minimum duration of time (post detection filtering). This last feature makes an excellent ‘macro’ filter, to suppress the detection of objects that are considered too transient. It can also be used as an extra stage of noise filtering.

Auto-Recalibration If a detection occurs for longer than a specified duration (user selected) the unit can optionally be made to self-recalibrate. This feature is useful to clear 'stuck sensor' conditions caused by debris around the sense element; auto recalibrate causes the QTM to take the current signal level as its new reference and only look at changes from that new level from that point forward; the offending debris is in effected nulled out. This feature can self-heal erroneous sensing conditions without requiring user intervention.

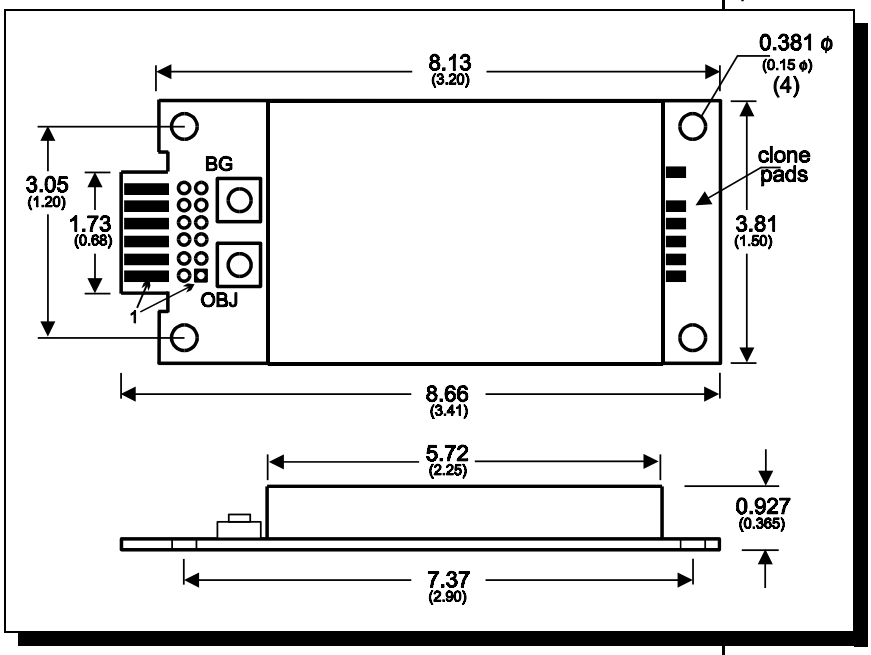

Detection Speed The QTM can output within 200µs when set to a 200µs burst rate, for a 5kHz update speed. Complex signal processing may require multiple signal samples and filtering steps, and response time will then be longer. The sensor can also be intentionally slowed down by slowing the burst rate and/or increasing the amount of pre- or post-detection filtering.

OUTPUTS

The QTM1001A provides an analog output that indicates signal level; this can be used as an indication of fill level (when used with a sensing strip or rod) or object proximity. The analog output can be sourced from either the raw analog signal which is good to at least 16 bits of resolution, or from the internal signal path, which allows the output of filtered, zero-compensated data.

The unit also provides two digital control outputs, in the form of simultaneous PNP and NPN drivers which can each control up to 100mA of current. The PNP driver high side is led to a separate connector pin so that it can be run from a separate pull-up power supply from that of the QTM's own supply. The outputs are primarily intended for driving logic inputs of PLC-type controllers, not for directly controlling heavy inductive loads. If used to control a logic-compatible relay, the relay should be diode clamped in the conventional manner (diode across coil, cathode to high side) to prevent damage to the output transistors from turn-off spikes. Only DC current should be switched with the output transistors.

HEARTBEAT™ OPTION

HeartBeat™ (option H) permits the QTM to be used in safety and security applications. HeartBeat monitors QTM's electronics integrity and electrode continuity for opens and shorts, and even the integrity of the output transistor itself. It provides a repetitive 5µs pulse on its output that can be easily removed using a simple RC network between the output and the logic input of a host controller. The HeartBeat signal can be separately detected using common logic components, or by also feeding the ouput line to a counter input of a host controller and monitoring the HeartBeat signal in software.

Also, multiple-connect option M lets two QTM's connect to the same electrode to allow redundant sensing for truly critical applications.

ENHANCED FEATURES

QTM has additional standard modes over those in the E2S. One, "Asymmetric Threshold Processing", allows rising signals to be treated differently from falling signals, for example to make the QTM more sensitive to approaching objects than departing ones, or to cause a longer 'recalibration timeout' on falling signals than rising ones (or vice versa).

Another feature is "Pulse Stretch" which allows the output duration to be lengthened by up to 10 seconds; this works like an adjustable retriggerable one-shot.

Enhanced features can be enabled via the use of reserved functions on the E2S when cloning to the QTM.

POWER

The QTM1001A requires a 7 to 20 VDC supply. It should be filtered and regulated for best performance; any supply using a 78xx class linear regulator will work fine. Output loads are not included in the current rating and should be added when specifying a power source.

CONNECTOR

The device makes use of a 2x6 2.54mm (0.1") pitch card edge connector; these are commonly available. QTM also supports a user-supplied IDC connector; a 2x6 hole pattern adjacent the edge connector permits the user to solder in a header strip if desired. As an alternative, the user can employ the 2x6 card edge connector for power and output alone, and solder in a 2-pin cable connector into two of the IDC connector holes on the board to provide a separate signal lead connector.

QTM1001A SPECIFICATIONS

Recommended Operating Conditions	min	typ	max	units
Recommended Supply Voltage	7		20	VDC
Supply voltage ripple and noise			100	mV rms
Load Capacitance	0		2,500	pF
Operating Temperature	-20		70	°C

Absolute Maximum Ratings	min	typ	max	units
Supply Voltage	-0.5		30	VDC
Output transistor voltage	-0.5		25	VDC
Output transistor current			100	|mA|
Sense signal lead voltage	-0.5		5	VDC
Sense signal lead current			50	|mA|
Analog output voltage	-0.5		5.0	VDC
Analog output current			10	|mA|

Operating Specifications	min	typ	max	units
Capacitance load range	0		2,500	pF
Resolution @ 2000 pF load		24		femtofarads (fF) / lsb Note 1
Resolution @ 1000 pF load		12		fF / lsb Note 1
Sensitivity @ 500 pF load		590		attofarads (aF) / mV Note 1
Differential linearity		1	1.5	lsb
Temperature coefficient of analog output, gain			35	ppm / °C
Termperature coefficient of analog output, offset		5		mV / °C @ full gain
Response time	200			µs
Burst spacing	200µs		100ms	Note 2
Burst randomization	0		50	% of burst spacing Note 3
Burst length	4		64	QT cycles / burst Note 4
Gate drive pulse width, min, charge or transfer		200		ns Note 5
Gate drive pulse width, max., charge or transfer		1,000		ns Note 5
Supply current		24		mA Note 6
Signal Processing				
Median filter sample length (when enabled)			5	samples (pipelined)
Boxcar filter sample length (when enabled)	2		64	samples Note 7
Drift compensation rate (when enabled)	100		0.2	secs/bit
Post-detection integrator length (when enabled)	1		200	counts Note 2
Post-detection recalibration timer duration (when enabled)	0.2		100	seconds Note 2
Pulse stretch duration (when enabled)	0.1		10	seconds Note 2
Outputs				
Output transistor on-resistance @ 10 mA			20	ohms
Analog frequency response (option)			2.5	kHz @ 200µs burst rate
Analog output impedance @ 1 kHz (option)			100	ohms
Analog output range, unloaded (option)	0.05		4.95	volts

Mechanical		units
Dimensions overall	3.41L x 1.50W x 0.365D	inches
Mounting hole pattern	2.90L x 1.20W x 0.15 ∅	inches
Weight	32	grams
Connector - Sullins EZC06DREH or equivalent	2 x 6, 2.54mm (0.1") pitch, 6.7mm depth	

Note 1: Special versions available
Note 2: In 1-2-5 sequence
Note 3: In steps of 12.5, 25, 50% of spacing
Note 4: In steps of 4, 8, 16, 24, 32….
Note 5: In steps of 100ns
Note 6: No electrode, outputs unloaded
Note 7: Intervals of 2, 4, 8, 16, 32, 64; boxcar is pipelined
All features and specifications subject to change

ORDER INFORMATION

QProx™ QTM1001A **QTM1001A**
HeartBeat™ option . . . . . **H suffix**
Card edge connector, solder tail **QTMCN12A**
Cloning adaptor **QTM1000CA**

QUANTUM Research Group Ltd. admin@qprox.com http://www.qprox.com
US Patent and US and international patents applied for. QProx and HeartBeat are trademarks of Quantum Research Group Ltd. R2.04/7.9
USA: 651 Holiday Drive Bldg 5 / 300, Pittsburgh, PA 15220 412-391-7367 Fax: 412-391-7307
UK: Enterprise House, Ocean Village, Southampton SO14 3XB Tel: +44 (0)23 8045 3934 Fax: +44 (0)23 8045 3939