HD14093B

Quadruple 2-input NAND Schmitt Trigger

The HD14093B Schmitt trigger finds primary use where low power dissipation and/or high noise immunity is desired. The HD14093B may be used in place of the HD14011B quad 2-input NAND gate for enhanced noise immunity or to "square up" slowly changing waveforms.

■ PIN ARRANGEMENT

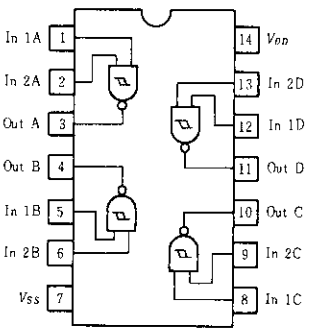

(Top View)

■ FEATURES

- Quiescent Current = 0.5nA/pkg typ. @5V
- Supply Voltage Range = 3 to 18V
- Capable of Driving One Low-power Schottky TTL Load Over the Rated Temperature Range
- Double Diode Protection on All Inputs
- Pin-for-Pin Compatible with CD4093 and MC14093B
- Can be Use to Replace HD14011B

■ LOGIC DIAGRAM (1/4)

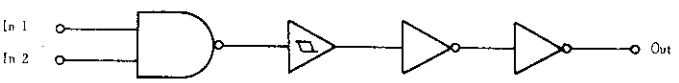

■ SWITCHING TIME TEST CIRCUIT

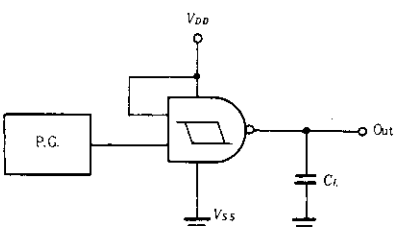

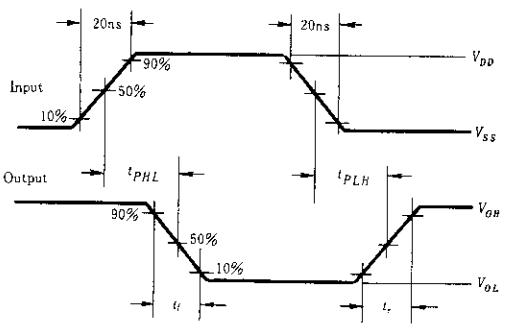

■ ELECTRICAL CHARACTERISTICS

Characteristic	Symbol	V_{DD}(V)	Test Conditions	−40°C min	−40°C max	25°C min	25°C typ	25°C max	85°C min	85°C max	Unit
Output Voltage	V_{OL}	5.0	$V_{in}=V_{DD}$ or 0	—	0.05	—	0	0.05	—	0.05	V
		10		—	0.05	—	0	0.05	—	0.05	
		15		—	0.05	—	0	0.05	—	0.05	
	V_{OH}	5.0	$V_{in}=0$ or V_{DD}	4.95	—	4.95	5.0	—	4.95	—	V
		10		9.95	—	9.95	10	—	9.95	—	
		15		14.95	—	14.95	15	—	14.95	—	
Input Voltage	V_{IL}	5.0	V_{out}=9.0 or 1.0V	—	1.5	—	2.25	1.5	—	1.5	V
		10	V_{out}=9.0 or 1.0V	—	3.0	—	4.50	3.0	—	3.0	
		15	V_{out}=13.5 or 1.5V	—	4.0	—	6.75	4.0	—	4.0	
	V_{IH}	5.0	V_{out}=0.5 or 4.5V	3.5	—	3.5	2.75	—	3.5	—	V
		10	V_{out}=1.0 or 9.0V	7.0	—	7.0	5.50	—	7.0	—	
		15	V_{out}=1.5 or 13.5V	11.0	—	11.0	8.25	—	11.0	—	
Output Drive Current	I_{OH}	5.0	V_{OH}=2.5V	−2.5	—	−2.1	−4.2	—	−1.7	—	mA
		5.0	V_{OH}=4.6V	−0.52	—	−0.44	−0.88	—	−0.36	—	
		10	V_{OH}=9.5V	−1.3	—	−1.1	−2.25	—	−0.9	—	
		15	V_{OH}=13.5V	−3.6	—	−3.0	−8.8	—	−2.4	—	
	I_{OL}	5.0	V_{OL}=0.4V	0.52	—	0.44	0.88	—	0.36	—	mA
		10	V_{OL}=0.5V	1.3	—	1.1	2.25	—	0.9	—	
		15	V_{OL}=1.5V	3.6	—	3.0	8.8	—	2.4	—	
Input Current	I_{in}	15		—	±0.3	—	±0.00001	±0.3	—	±1.0	μA
Input Capacitance	C_{in}	—	V_{in}=0	—	—	—	5.0	7.5	—	—	pF
Quiescent Current	I_{DD}	5.0	Zero Signal, per Package	—	1.0	—	0.0005	1.0	—	7.5	μA
		10		—	2.0	—	0.0010	2.0	—	15	
		15		—	4.0	—	0.0015	4.0	—	30	
Total Supply Current*	I_T	5.0	Dynamic $+I_{DD}$, per Gate, C_L=50pF f=1kHz	—	—	—	1.2	—	—	—	μA
		10		—	—	—	2.4	—	—	—	
		15		—	—	—	3.6	—	—	—	
Hysteresis Voltage	V_H	5.0		0.20	0.42	0.17	0.26	0.39	0.13	0.39	V
		10		0.29	0.65	0.25	0.38	0.60	0.20	0.60	
		15		0.39	1.00	0.33	0.5	0.90	0.27	0.90	
Threshold Voltage	V_T^+	5.0		1.90	4.15	1.80	2.70	4.05	1.70	4.05	V
		10		3.05	6.75	2.95	4.43	6.65	2.85	6.65	
		15		4.12	9.15	4.02	6.03	9.05	3.92	9.05	
	V_T	5.0		1.63	3.76	1.63	2.44	3.66	1.53	3.66	
		10		2.70	6.18	2.70	4.05	6.08	2.60	6.08	
		15		3.59	8.40	3.69	5.53	8.38	3.70	8.30	

* To calculate total supply current at frequency other than 1kHz.
@V_{DD}=5.0V $I_T=(1.2\mu A/kHz)f+I_{DD}$, @$V_{DD}$=10V $I_T=(2.4\mu A/kHz)f+I_{DD}$=15V $I_T=(3.6\mu A/kHz)f+I_{DD}$

■ SWITCHING CHARACTERISTICS (C_L=50pF, Ta=25°C)

Characteristic	Symbol	V_{DD}(V)	min	typ	max	Unit
Output Rise Time	t_r	5.0	—	100	200	ns
		10	—	50	100	
		15	—	40	80	
Output Fall Time	t_f	5.0	—	100	200	ns
		10	—	50	100	
		15	—	40	80	
Propagation Delay Time	t_{PLH}, t_{PHL}	5.0	—	125	250	ns
		10	—	50	100	
		15	—	40	80	

Unit: mm

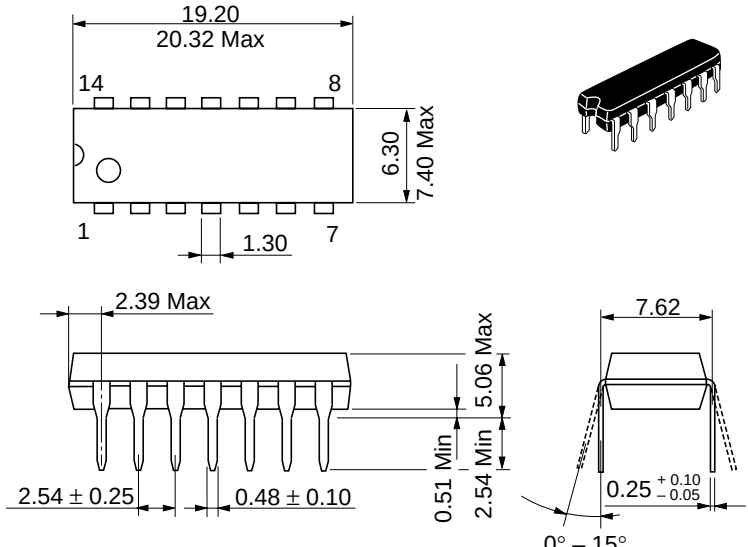

Hitachi Code	DP-14
JEDEC	Conforms
EIAJ	Conforms
Weight (reference value)	0.97 g

Unit: mm

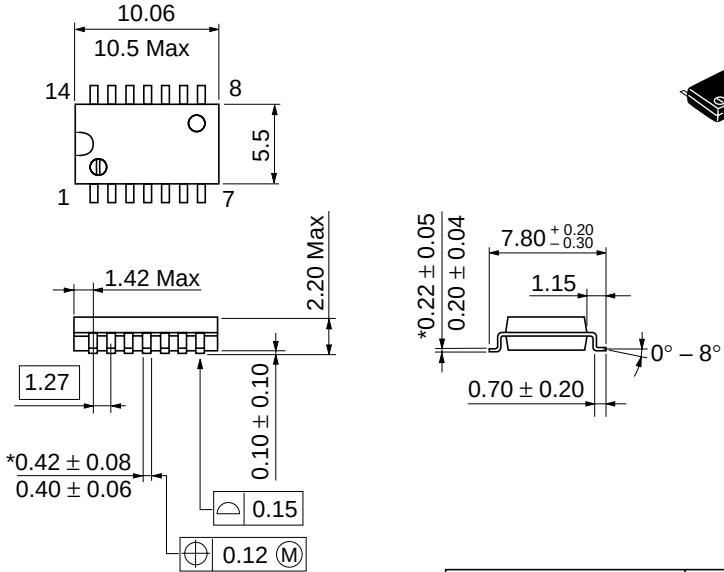

Hitachi Code	FP-14DA
JEDEC	—
EIAJ	Conforms
Weight (reference value)	0.23 g

*Dimension including the plating thickness / Base material dimension

Unit: mm

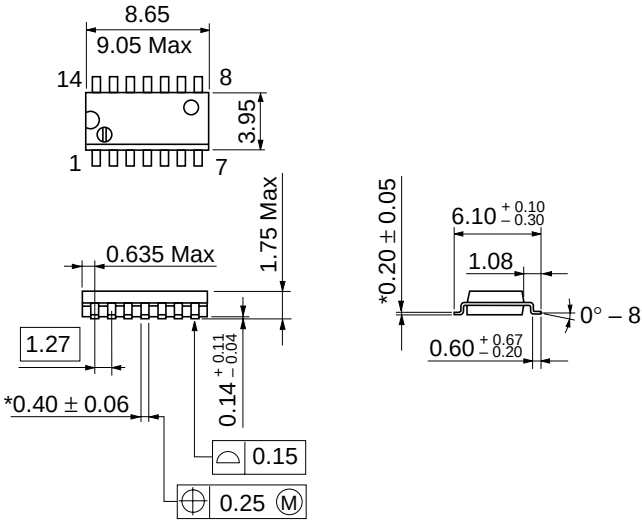

Hitachi Code	FP-14DN
JEDEC	Conforms
EIAJ	Conforms
Weight (reference value)	0.13 g

*Pd plating

Cautions

1. Hitachi neither warrants nor grants licenses of any rights of Hitachi's or any third party's patent, copyright, trademark, or other intellectual property rights for information contained in this document. Hitachi bears no responsibility for problems that may arise with third party's rights, including intellectual property rights, in connection with use of the information contained in this document.
2. Products and product specifications may be subject to change without notice. Confirm that you have received the latest product standards or specifications before final design, purchase or use.
3. Hitachi makes every attempt to ensure that its products are of high quality and reliability. However, contact Hitachi's sales office before using the product in an application that demands especially high quality and reliability or where its failure or malfunction may directly threaten human life or cause risk of bodily injury, such as aerospace, aeronautics, nuclear power, combustion control, transportation, traffic, safety equipment or medical equipment for life support.
4. Design your application so that the product is used within the ranges guaranteed by Hitachi particularly for maximum rating, operating supply voltage range, heat radiation characteristics, installation conditions and other characteristics. Hitachi bears no responsibility for failure or damage when used beyond the guaranteed ranges. Even within the guaranteed ranges, consider normally foreseeable failure rates or failure modes in semiconductor devices and employ systemic measures such as fail-safes, so that the equipment incorporating Hitachi product does not cause bodily injury, fire or other consequential damage due to operation of the Hitachi product.
5. This product is not designed to be radiation resistant.
6. No one is permitted to reproduce or duplicate, in any form, the whole or part of this document without written approval from Hitachi.
7. Contact Hitachi's sales office for any questions regarding this document or Hitachi semiconductor products.

HITACHI

Hitachi, Ltd.
Semiconductor & Integrated Circuits.
Nippon Bldg., 2-6-2, Ohte-machi, Chiyoda-ku, Tokyo 100-0004, Japan
Tel: Tokyo (03) 3270-2111 Fax: (03) 3270-5109

URL
NorthAmerica : http:semiconductor.hitachi.com/
Europe : http://www.hitachi-eu.com/hel/ecg
Asia (Singapore) : http://www.has.hitachi.com.sg/grp3/sicd/index.htm
Asia (Taiwan) : http://www.hitachi.com.tw/E/Product/SICD_Frame.htm
Asia (HongKong) : http://www.hitachi.com.hk/eng/bo/grp3/index.htm
Japan : http://www.hitachi.co.jp/Sicd/indx.htm

For further information write to:

Hitachi Semiconductor (America) Inc.
179 East Tasman Drive,
San Jose,CA 95134
Tel: <1> (408) 433-1990
Fax: <1>(408) 433-0223

Hitachi Europe GmbH
Electronic components Group
Dornacher Stra§e 3
D-85622 Feldkirchen, Munich
Germany
Tel: <49> (89) 9 9180-0
Fax: <49> (89) 9 29 30 00

Hitachi Europe Ltd.
Electronic Components Group.
Whitebrook Park
Lower Cookham Road
Maidenhead
Berkshire SL6 8YA, United Kingdom
Tel: <44> (1628) 585000
Fax: <44> (1628) 778322

Hitachi Asia Pte. Ltd.
16 Collyer Quay #20-00
Hitachi Tower
Singapore 049318
Tel: 535-2100
Fax: 535-1533

Hitachi Asia Ltd.
Taipei Branch Office
3F, Hung Kuo Building. No.167,
Tun-Hwa North Road, Taipei (105)
Tel: <886> (2) 2718-3666
Fax: <886> (2) 2718-8180

Hitachi Asia (Hong Kong) Ltd.
Group III (Electronic Components)
7/F., North Tower, World Finance Centre,
Harbour City, Canton Road, Tsim Sha Tsui,
Kowloon, Hong Kong
Tel: <852> (2) 735 9218
Fax: <852> (2) 730 0281
Telex: 40815 HITEC HX