FUJITSU SEMICONDUCTOR
DATA SHEET

DS04-28501-2E

ASSP

Single Chip 8-Bit A/D and 9-Bit D/A Converter

MB40168/MB40178

■ DESCRIPTION

The Fujitsu MB40168 and MB40178 are high speed, low power single chip A/D and D/A converters designed for video processing applications. The A/D converter has a resolution of 8 bits while the D/A converter has 9-bit resolution. They are fabricated in Fujitsu's advanced bipolar technology, and housed in a 48-pin plastic shrink DIP or 44-pin plastic QFP package.

■ FEATURES

- Resolution — A/D: 8 bits; D/A: 9 bits
- Conversion Rate — A/D: Max. 20 MSPS; D/A: Max. 40 MSPS
- Linearity Error — A/D: Max. ± 0.3%; D/A: Max. ± 0.2%
- On-chip reference voltage generator (resistor divided method) and clamp circuit
- Analog Input Voltage — 3 to 5 V without clamp circuit; 0 to 3 V in 1.95 V_{P-P} clamp circuit
- Analog Output Voltage — 3 to 5 V

(Continued)

■ PACKAGES

48 pin, Plastic SH-DIP

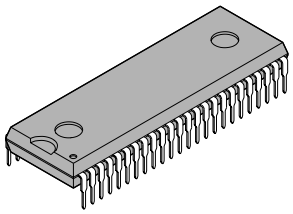

(DIP-48P-M01)

44 pin, Plastic QFP

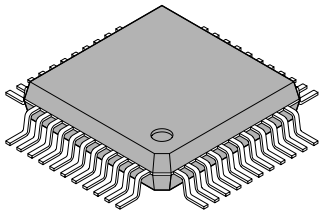

(FPT-44P-M11)

This device contains circuitry to protect the inputs against damage due to high static voltages or electric fields. However, it is advised that normal precautions be taken to avoid application of any voltage higher than maximum rated voltages to this high impedance circuit.

(Continued)

- Digital Input/Output Interface — TTL Levels
- Power Supply Voltage — + 5.0 V single power supply
- Power Dissipation — Typ. 350 mW
- Package Options — 48-pin Plastic Shrink DIP/ 44-pin Plastic QFP Package

■ PIN ASSIGNMENTS

• MB40168

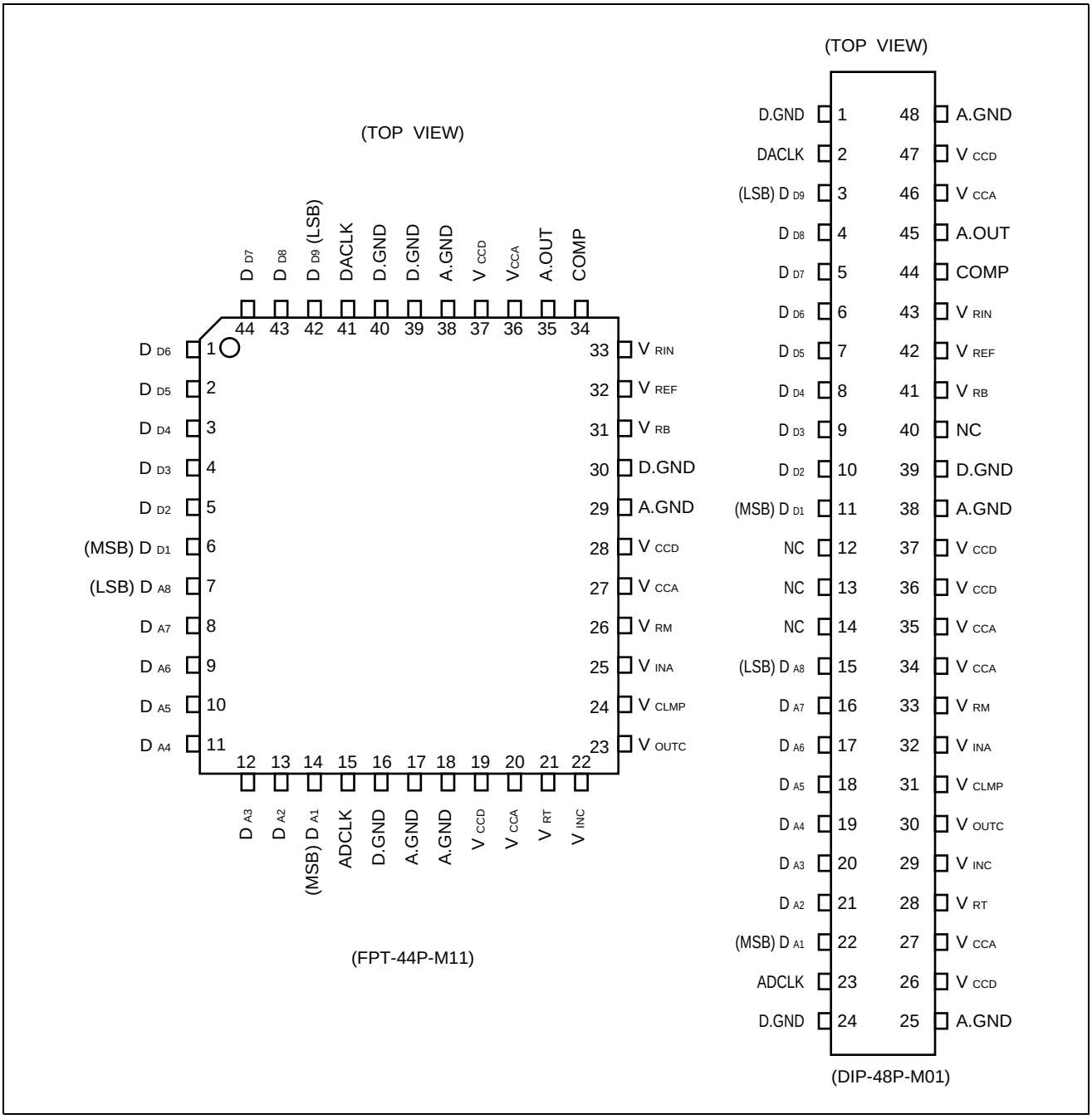

• MB40178

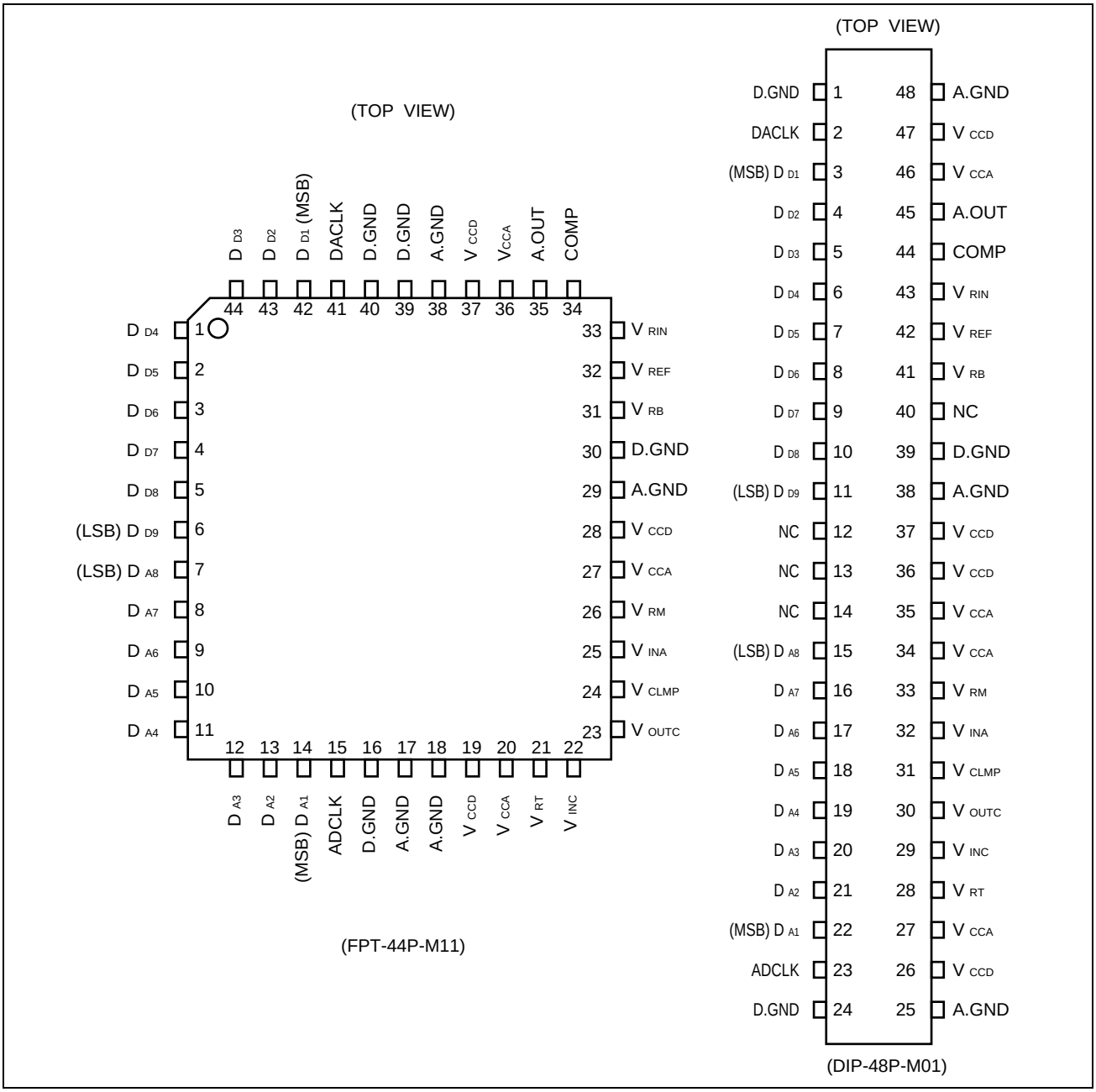
(TOP VIEW)
D D3 44
D D2 43
D D1 (MSB) 42
DACLK 41
D.GND 40
D.GND 39
A.GND 38
V CCD 37
VCCA 36
A.OUT 35
COMP 34
D D4 1
D D5 2
D D6 3
D D7 4
D D8 5
(LSB) D D9 6
(LSB) D A8 7
D A7 8
D A6 9
D A5 10
D A4 11
33 V RIN
32 V REF
31 V RB
30 D.GND
29 A.GND
28 V CCD
27 V CCA
26 V RM
25 V INA
24 V CLMP
23 V OUTC
12 D A3
13 D A2
14 (MSB) D A1
15 ADCLK
16 D.GND
17 A.GND
18 A.GND
19 V CCD
20 V CCA
21 V RT
22 V INC
(FPT-44P-M11)
(TOP VIEW)
D.GND 1
DACLK 2
(MSB) D D1 3
D D2 4
D D3 5
D D4 6
D D5 7
D D6 8
D D7 9
D D8 10
(LSB) D D9 11
NC 12
NC 13
NC 14
(LSB) D A8 15
D A7 16
D A6 17
D A5 18
D A4 19
D A3 20
D A2 21
(MSB) D A1 22
ADCLK 23
D.GND 24
48 A.GND
47 V CCD
46 V CCA
45 A.OUT
44 COMP
43 V RIN
42 V REF
41 V RB
40 NC
39 D.GND
38 A.GND
37 V CCD
36 V CCD
35 V CCA
34 V CCA
33 V RM
32 V INA
31 V CLMP
30 V OUTC
29 V INC
28 V RT
27 V CCA
26 V CCD
25 A.GND
(DIP-48P-M01)

■ PIN DESCRIPTION

Symbol	Pin No.		I/O	Name & Function
	QFP-44	SH-DIP-48		
V_{CCD}	19, 28, 37	26, 36, 37, 47	—	Digital Power Supply pins (+ 5 V).
V_{CCA}	20, 27, 36	27, 34, 35, 46	—	Analog Power Supply pins (+ 5 V).
DGND	16, 30, 39, 40	1, 24, 39	—	Digital Ground (0 V). These pins should be connected to the analog ground on the application system.
AGND	17, 18, 29, 38	25, 38, 48	—	Analog Ground (0 V). These pins should be connected to the analog ground on the application system.
D_{A8} - D_{A1}	7 - 14	15 - 22	O	ADC Digital Output pins. TTL level.
ADCLK	15	23	I	ADC Clock Input pin. TTL level.
V_{RT}	21	28	I	ADC Reference Voltage Input pin. (5 V Input)
V_{INC}	22	29	I	Sync Tip Clamp Circuit Analog Input pin. (0 - 3 V, 1.95 V_{P-P}). When a clamp circuit is not used, this pin is connected to ground.
V_{OUTC}	23	30	O	Clamp Circuit Analog Output pin. It is used by adding a capacitor (1 µF or more) between V_{CLMP} and V_{OVTC} pins. When a clamp circuit is not used, this pin is left open.
V_{CLMP}	24	31	O	Clamp Voltage Output pin (3.05V Output). When a clamp circuit is not used, this pin is left open.
V_{INA}	25	32	I	ADC Analog Signal Input pin. (3 - 5 V)
V_{RM}	26	33	—	ADC Middle Reference Voltage Monitor pin. (Mid of V_{RT} - V_{RB} is set to this pin). Normally this pin is left open.
V_{RB}	31	41	I	ADC Reference Voltage Input pin. (3 V)
V_{REF}	32	42	O	Reference Voltage Output pin. (Resistor Divider, 3 V) By connecting this pin to V_{RB} pin, 3V Voltages are generated. When a reference voltage is not used, this pin is left open.
V_{RIN}	33	43	I	DAC Reference Voltage Input pin (3 V)
COMP	34	44	—	Phase Compensation Capacitor pin. (Capacitor greater than 0.1 µF should be connected between this pin and Analog Ground.)
A_{OUT}	35	45	O	Analog Signal Output pin
DACLK	41	2	I	DAC Clock Input pin. TTL level.
D_{D9} - D_{D1}	1 - 6 *1 42 - 44	3 - 11*2	I	DAC Digital Data Input pins. TTL level.

*1: MB40168 (MSB: 6 pin, LSB: 42 pin), MB40178 (MSB: 42 pin, LSB: 6 pin)
*2: MB40168 (MSB: 11 pin, LSB: 3 pin), MB40178 (MSB: 3 pin, LSB: 11 pin)

■ BLOCKDIAGRAM

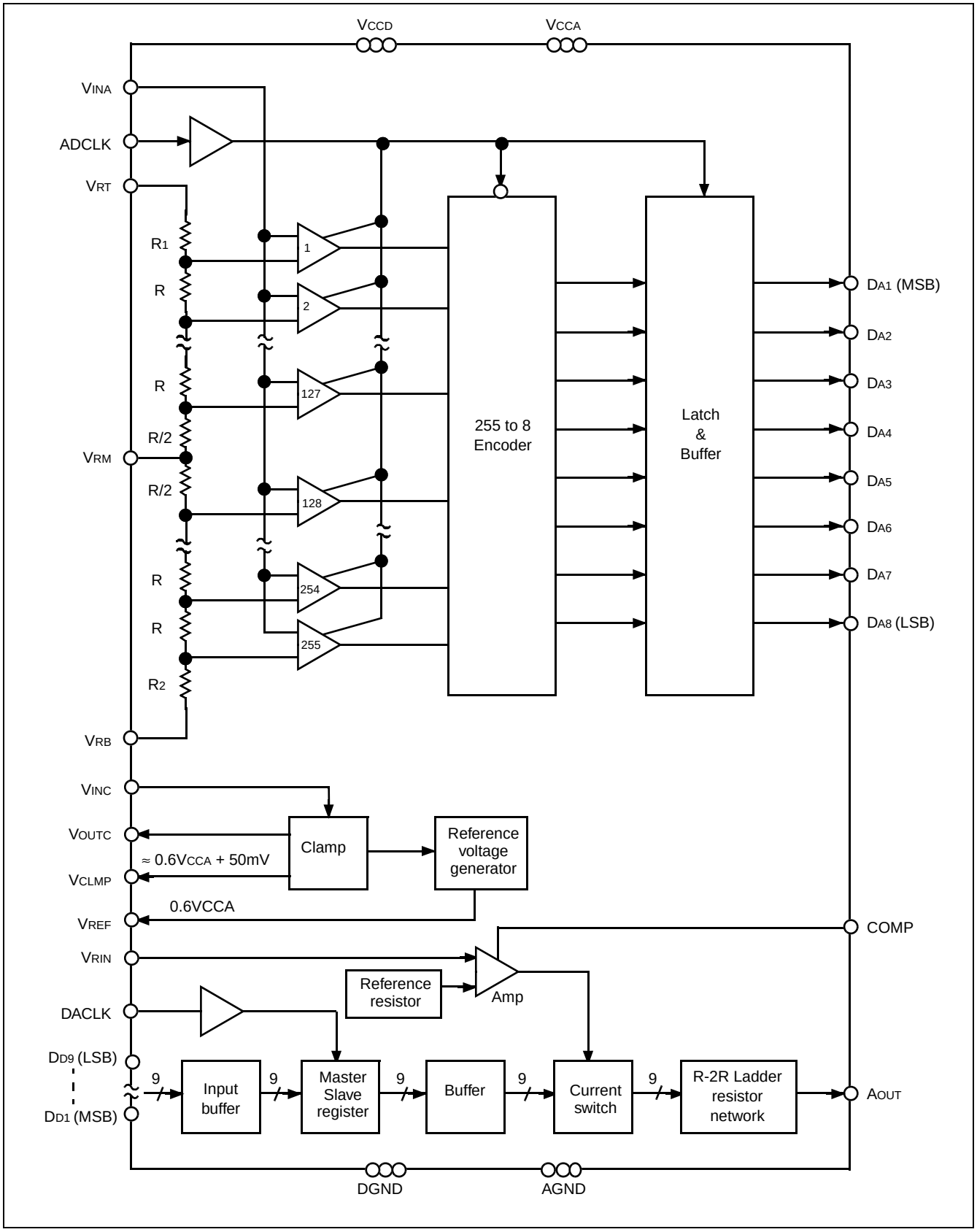

■ ABSOLUTE MAXIMUM RATINGS

Parameter	Symbol	Rating	Unit
Power supply voltage	V_{CCA}, V_{CCD}	–0.5 to 7.0	V
Analog input voltage	V_{INA}	–0.5 to V_{CC} + 0.5	V
Reference voltage	V_{RT}, V_{RB}, V_{RIN}	–0.5 to V_{CC} + 0.5	V
Clamp circuit input voltage	V_{INC}	–0.5 to V_{CC} + 0.5	V
Digital input voltage	V_{IND}	–0.5 to 7.0	V
Storage temperature	T_{STG}	–55 to +125	°C

Note: Permanent device damage may occur if the above **Absolute Maximum Ratings** are exceeded. Functional operation should be restricted to the conditions as detailed in the operational sections of this data sheet. Exposure to absolute maximum rating conditions for extended periods may affect device reliability.

■ RECOMMENDED OPERATING CONDITIONS

Parameter		Symbol	Value			Unit
			Min.	Typ.	Max.	
Power supply voltage *1		V_{CCA}, V_{CCD}	4.75	5.00	5.25	V
Clamp circuit input voltage *2		V_{INC}	0	—	3	V
Analog input voltage		V_{INA}	V_{RB}	—	V_{RT}	V
ADC reference voltage *3	Top	V_{RT}	V_{CCA} – 0.1	V_{CCA}	V_{CCA} + 0.1	V
	Bottom	V_{RB}	2.75	3.0	3.25	V
DAC reference voltage		V_{CCA} - V_{RIN}	0.7	2.0	2.2	V
		V_{RIN}	2.65	3.0	4.3	V
Digital input high voltage		V_{IHD}	2.0	—	—	V
Digital input low voltage		V_{ILD}	—	—	0.8	V
Digital output high current		I_{OH}	–400	—	—	µA
Digital output low current		I_{OL}	—	—	1.6	mA
Clock frequency	A/D	f_{CLKAD}	—	—	20	MHz
	D/A	f_{CLKDA}	—	—	40	MHz
Minimum high clock pulse width	A/D	t_{WHAD}	22.5	—	—	ns
	D/A	t_{WHDA}	10.5	—	—	ns
Minimum Low clock pulse width	A/D	t_{WLAD}	22.5	—	—	ns
	D/A	t_{WLAD}	10.5	—	—	ns
Set up time		t_{SU}	10	—	—	ns
Hold time		t_H	4	—	—	ns
Clamp capacitance		C_{CLMP}	1	—	—	µF
Phase compensation capacitance		C_{COMP}	0.1	—	—	µF
Ambient operating temperature		Ta	–20	—	+70	°C

*1: V_{CCA} and V_{CCD} must be used in the same voltage level.
*2: V_{INC} must have an amplitude of V_{RT} - V_{CLMP}.
*3: V_{RT} - V_{RB} must have 2.0V±0.1V.

■ ELECTRICAL CHARACTERISTICS

1. DC Characteristics

- Analog Block

(V_{CCA} = V_{CCD} = 4.75 V to 5.25 V, Ta = –20 °C to +70 °C)

Parameter	Symbol	Condition	Value			Unit
			Min.	Typ.	Max.	
ADC resolution	—	—	—	8	—	bits
DAC resolution	—	—	—	9	—	bits
ADC linearity error	LE_{AD}	DC accuracy V_{CCA} = V_{CCD} = 5.0 V	—	± 0.15	± 0.3	%
DAC linearity error	LE_{DA}		—	± 0.1	± 0.2	%
Analog input equivalent impedance	R_{INA}	$R_{INA} = \frac{V_{RT} - V_{RB}}{I_{IHA} - I_{ILA}}$	0.3	1.3	—	MΩ
Analog input capacitance	C_{INA}	f_{INA} = 1 MHz	—	40	—	pF
Analog input high current	I_{IHA}	V_{INA} = V_{RT}	—	—	45	µA
Analog input low current	I_{ILA}	V_{INA} = V_{RB}	—	—	40	µA
Reference output voltage	V_{REF}	V_{REF}, V_{RB}, V_{RIN} shorted together	0.6V_{CCA} – 0.1	0.6V_{CCA}	0.6V_{CCA}+ 0.1	V
Clamp voltage	V_{CLMP}	—	—	V_{REF} + 50 mV	—	V
ADC reference current	I_{RB}	—	–8.5	–5.5	–3.0	mA
DAC reference current	I_{RIN}	V_{RIN} = 3.000 V	—	—	10	µA
Clamp circuit input current	I_{INC}	V_{INC} = 0 V	–600	–200	—	µA
Full scale output voltage	V_{OFS}	—	V_{CCA}–20mV	V_{CCA}	—	V
Zero scale output voltage	V_{OZS}	V_{CCA} = 5.00 V V_{CCD} = 5.00 V V_{RIN} = 3.000 V	2.934	3.004	3.072	V
Output impedance	R_O	Ta = +25 °C	192	240	288	Ω
Supply current	I_{CC}	—	—	70	125	mA

- Digital Block

(V_{CCA} = V_{CCD} = 4.75 V to 5.25 V, Ta = –20 °C to +70 °C)

Parameter	Symbol	Condition	Value			Unit
			Min.	Typ.	Max.	
Digital output high voltage	V_{OHD}	I_{OH} = –400 µA	2.7	—	—	V
Digital output low voltage	V_{OLD}	I_{OL} = 1.6 mA	—	—	0.4	V
Digital input high voltage	V_{IHD}	—	2.0	—	—	V
Digital input low voltage	V_{ILD}	—	—	—	0.8	V
Digital input high current	I_{IHD}	V_{IHD} = 2.7 V	—	—	20	µA
Digital input low curent	I_{ILD}	V_{ILD} = 0.4 V	–100	—	—	µA

2. AC CHARACTERISTICS

(V_{CCA} = V_{CCD} = 4.75 V to 5.25 V, Ta = –20 °C to +70 °C)

Parameter		Symbol	Condition	Value			Unit
				Min.	Typ.	Max.	
Maximum conversion rate	A/D	f_{SAD}	—	20	—	—	MSPS
	D/A	f_{SDA}	—	40	—	—	MSPS
Digital output delay time		$t_{pd\ AD}$	—	8	15	30	ns
Analog output delay time		$t_{pd\ DA}$	C_L = 15 pF Terminating resistor A_{OUT} = 240 Ω	—	10	—	ns
Analog output rise time		t_r		—	5	—	ns
Analog output fall time		t_f		—	5	—	ns
Settling time		$t_{set\ LH}$, $t_{set\ HL}$		—	16	—	ns

■ LINEARITY ERROR OF A/D CONVERSION

- **Ideal Characteristic**

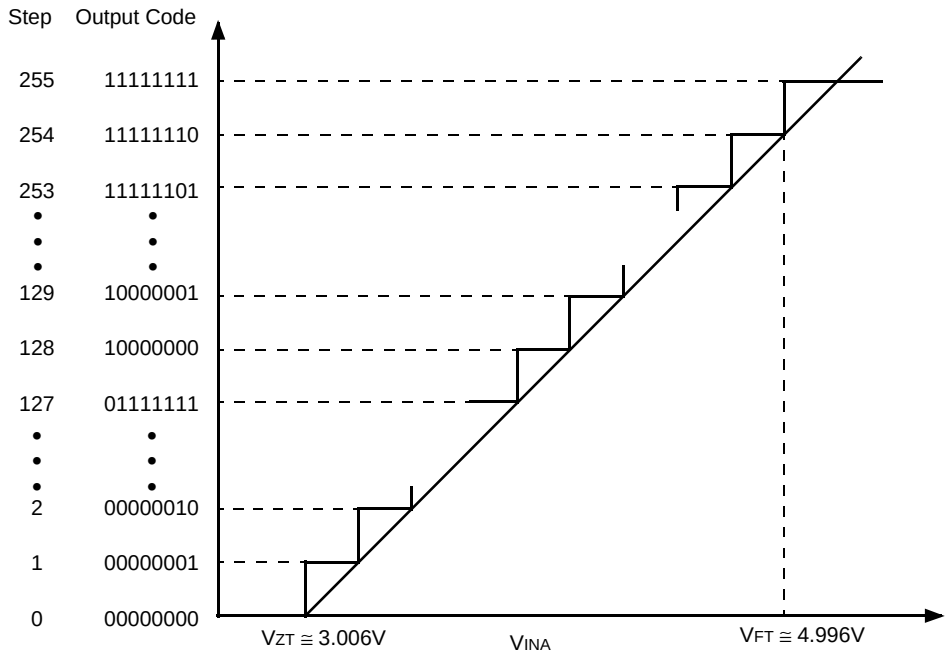

Note: The values for V_{ZT} and V_{FT} are typical values under conditions that $V_{CCA} = V_{CCD} = V_{RT} = 5.000V$ and $V_{RB} = 3.000V$.

- **Actual Characteristic**

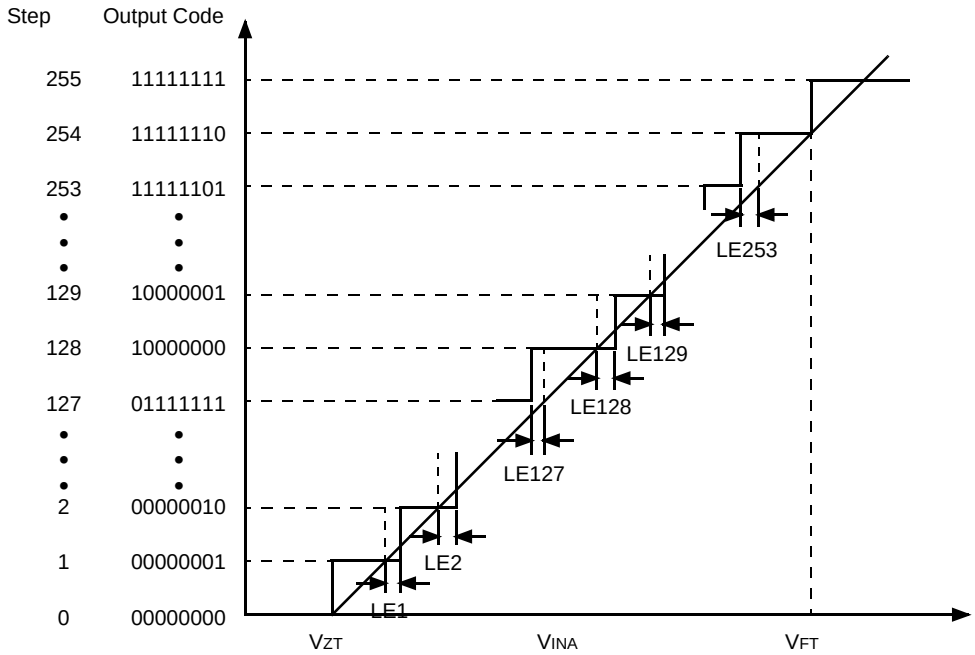

■ OUTPUT VOLTAGE CHARACTERISTIC OF D/A CONVERTER BLOCK

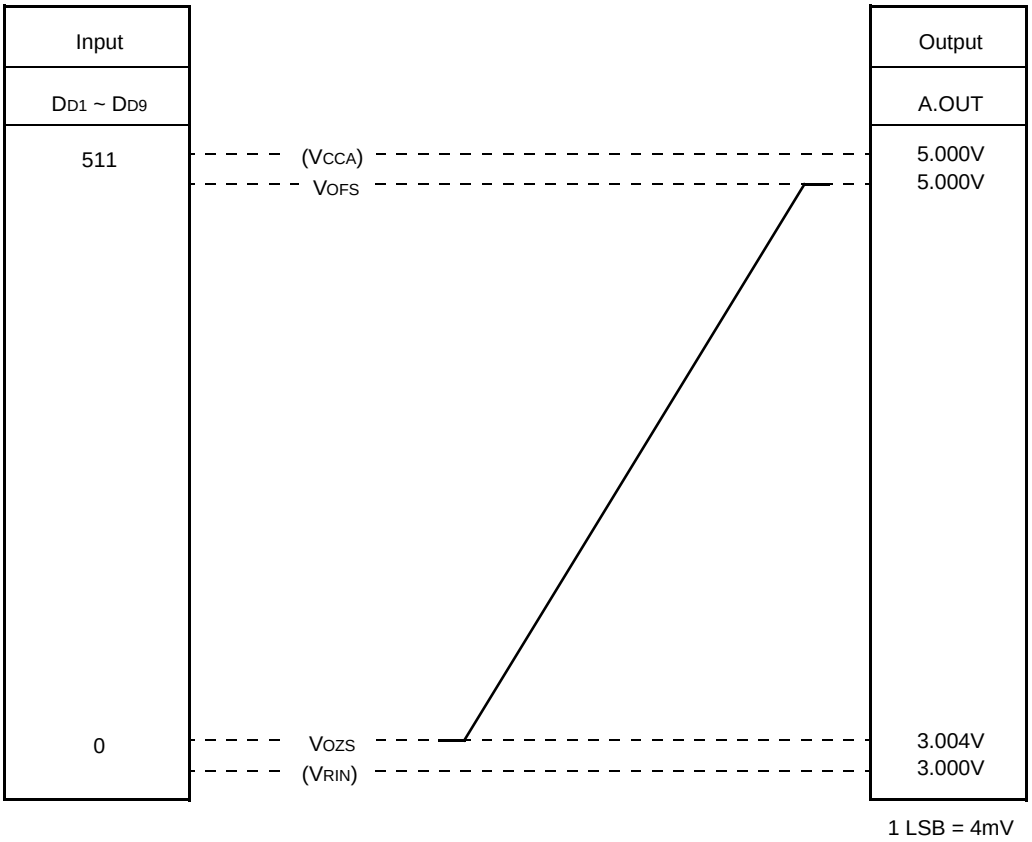

■ CALCULATION OF DAC OUTPUT VOLTAGE WHEN THE IDEAL CONVERSION IS PERFORMED

$$AOUT_N = V_{CCA} - \frac{511-N}{512} \times (V_{CCA} - V_{RIN})$$

(N: Digital code (0 ~ 511)

$$V_{OFS} = V_{CCA}$$

$$V_{OZS} = V_{CCA} - \frac{511}{512} \times (V_{CCA} - V_{RIN})$$

■ EQUIVALENT CIRCUITS OF ADC BLOCK

- **Analog Input Equivalent Circuit**

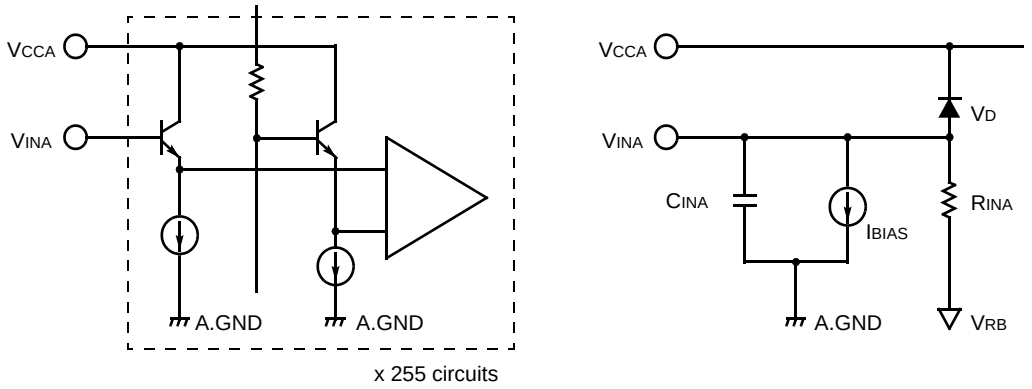

CINA: Junction Capacitance of non-linear emitter follower
RINA: Linear resistance model of input current by the comparator switching
VINA < VRB: ∞
CLK = "H": ∞
VRB: This is the voltage on VRB Pin, not VRB Pin itself.
IBIAS: Constant input bias current
VD: Base-Collector junction diode of emitter follower transistor

- **Clamp Input Equivalent Circuit**

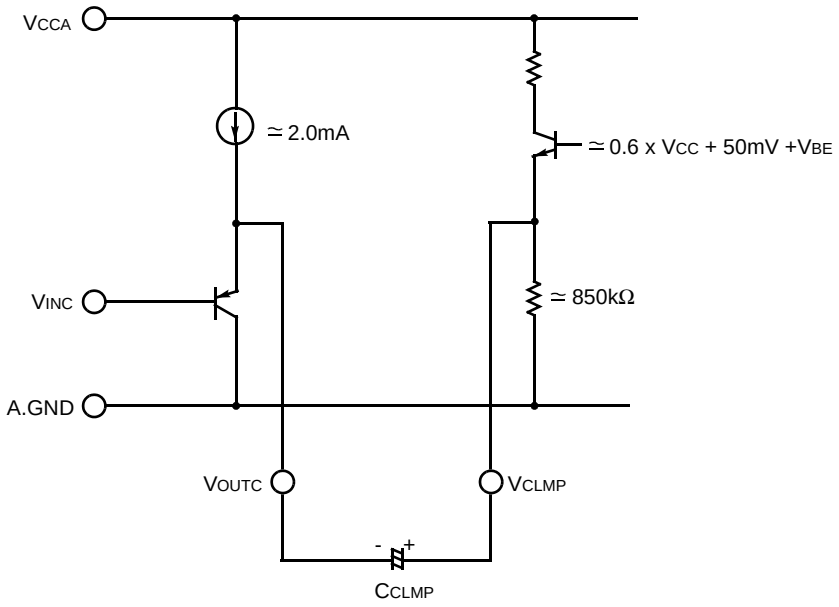

- **Digital Input Equivalent Circuit**

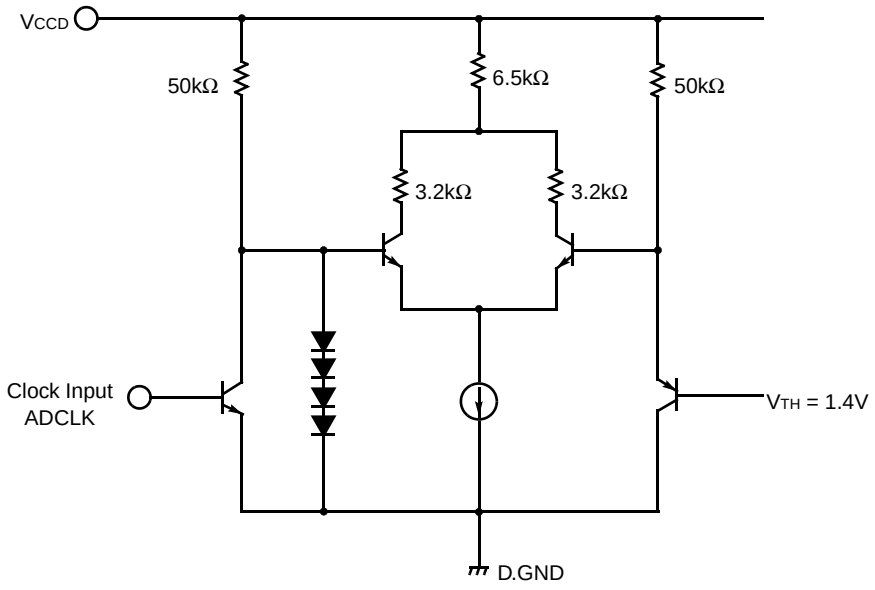

- **Digital Output Load Circuit**

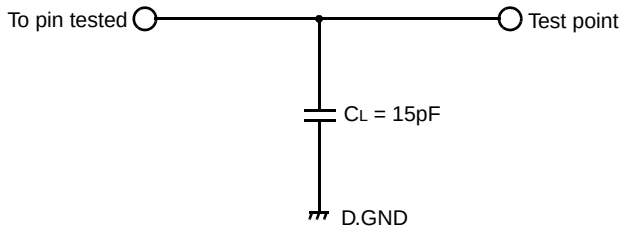

NOTE: C_L includes the floating capacitance of probe and jig.

■ EQUIVALENT CIRCUITS OF DAC BLOCK

- **Digital Input Equivalent Circuit**

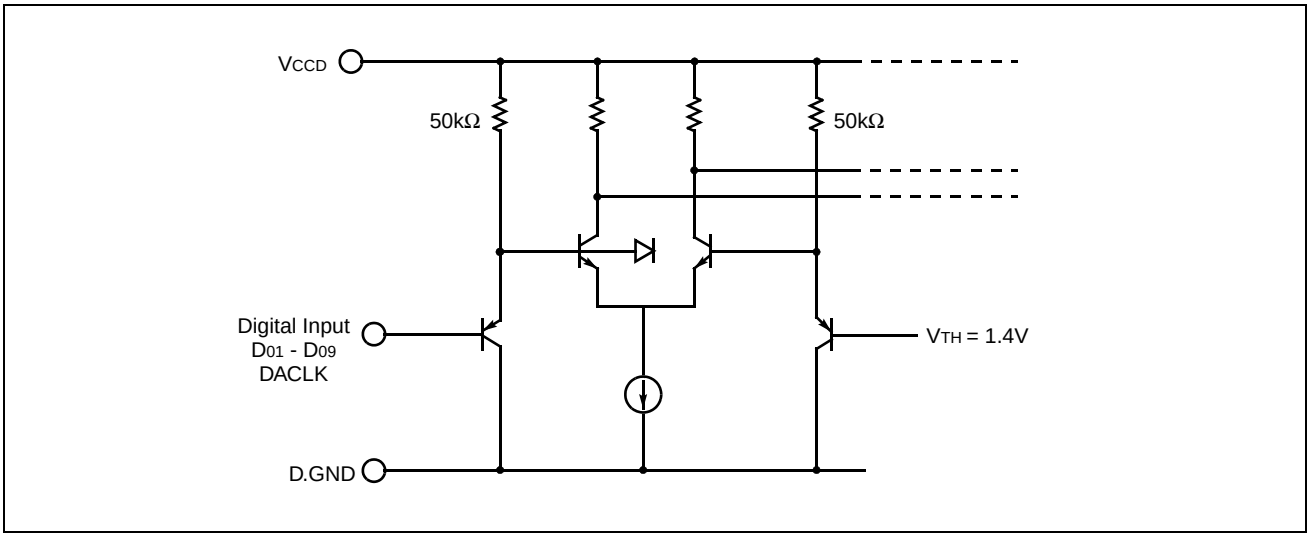

- **Analog Output Equivalent Circuit**

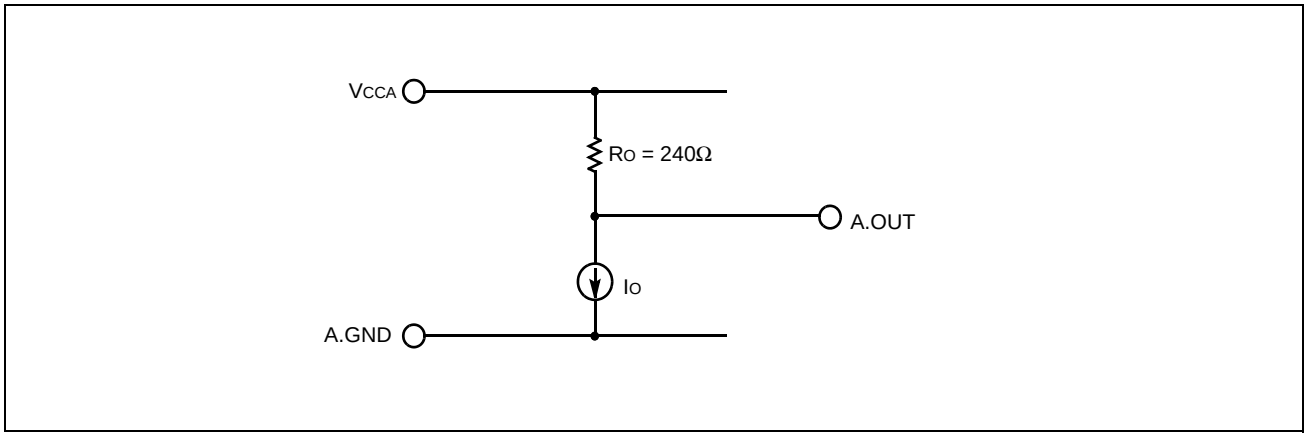

- **Reference Voltage Generator Equivalent Circuit**

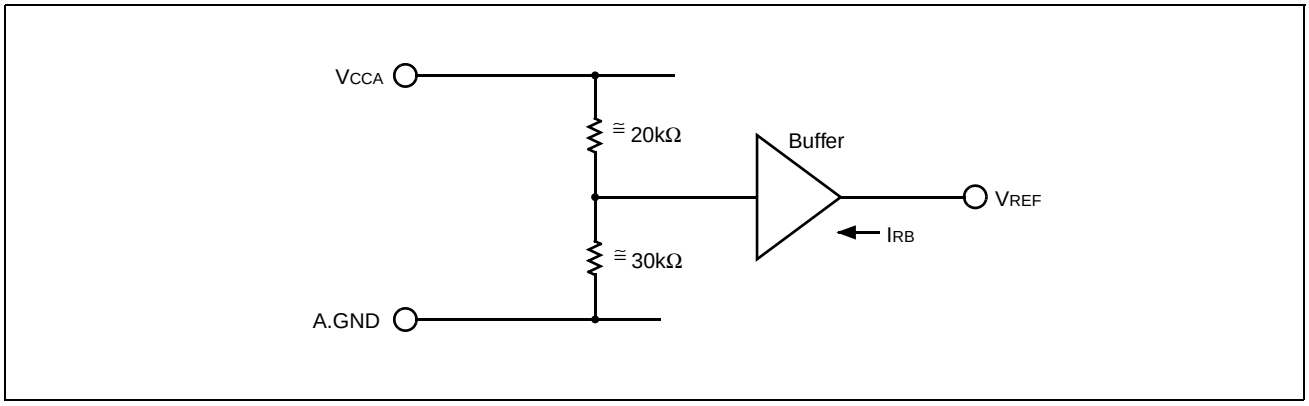

■ TYPICAL CONNECTION CIRCUITS

Example 1: Video Signal Input to VINC Pin

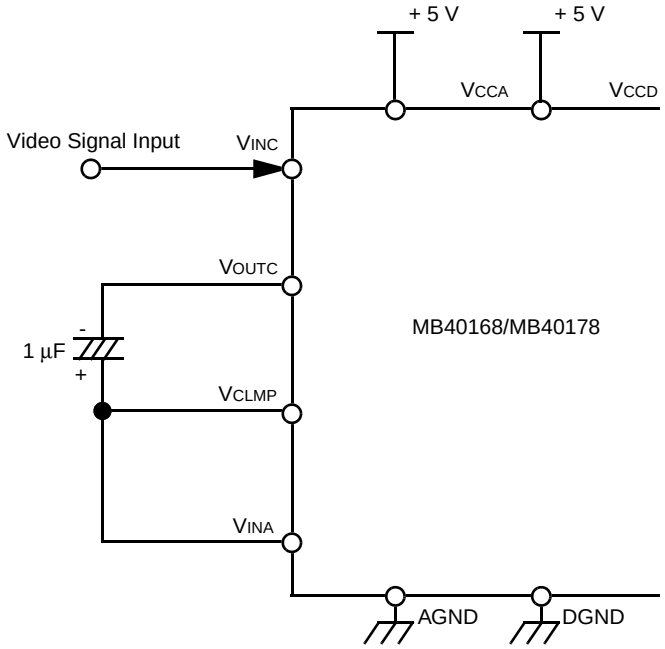

Example 2: Video Signal Input to VCLMP and VINA Pins

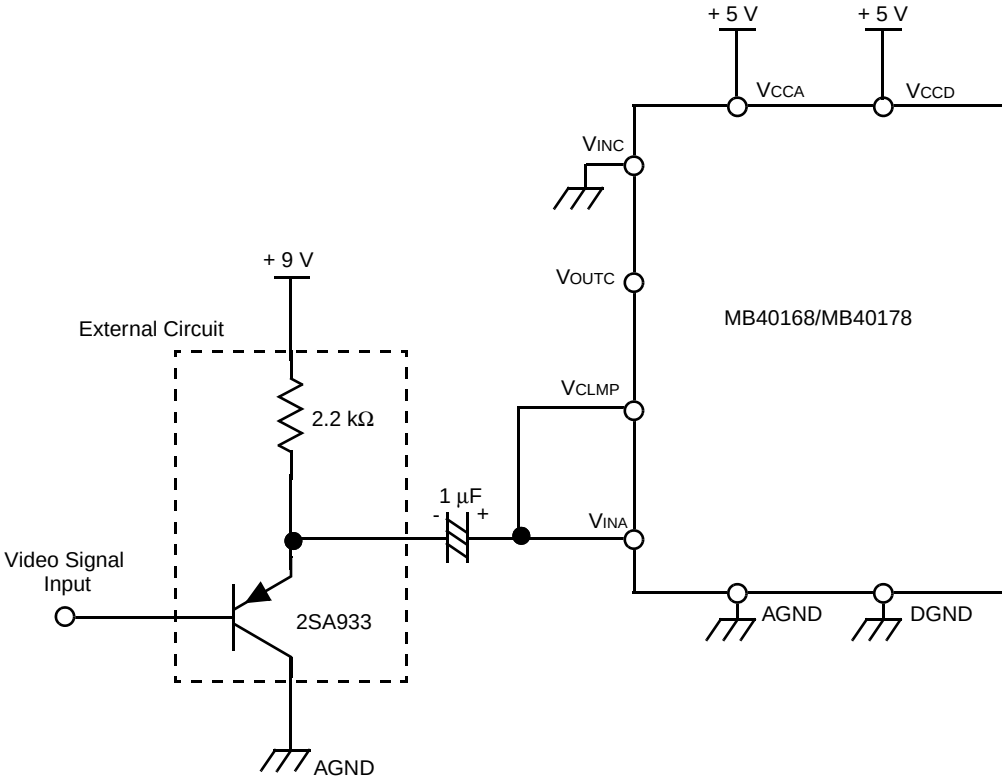

■ CLAMP CIRCUIT OPERATION

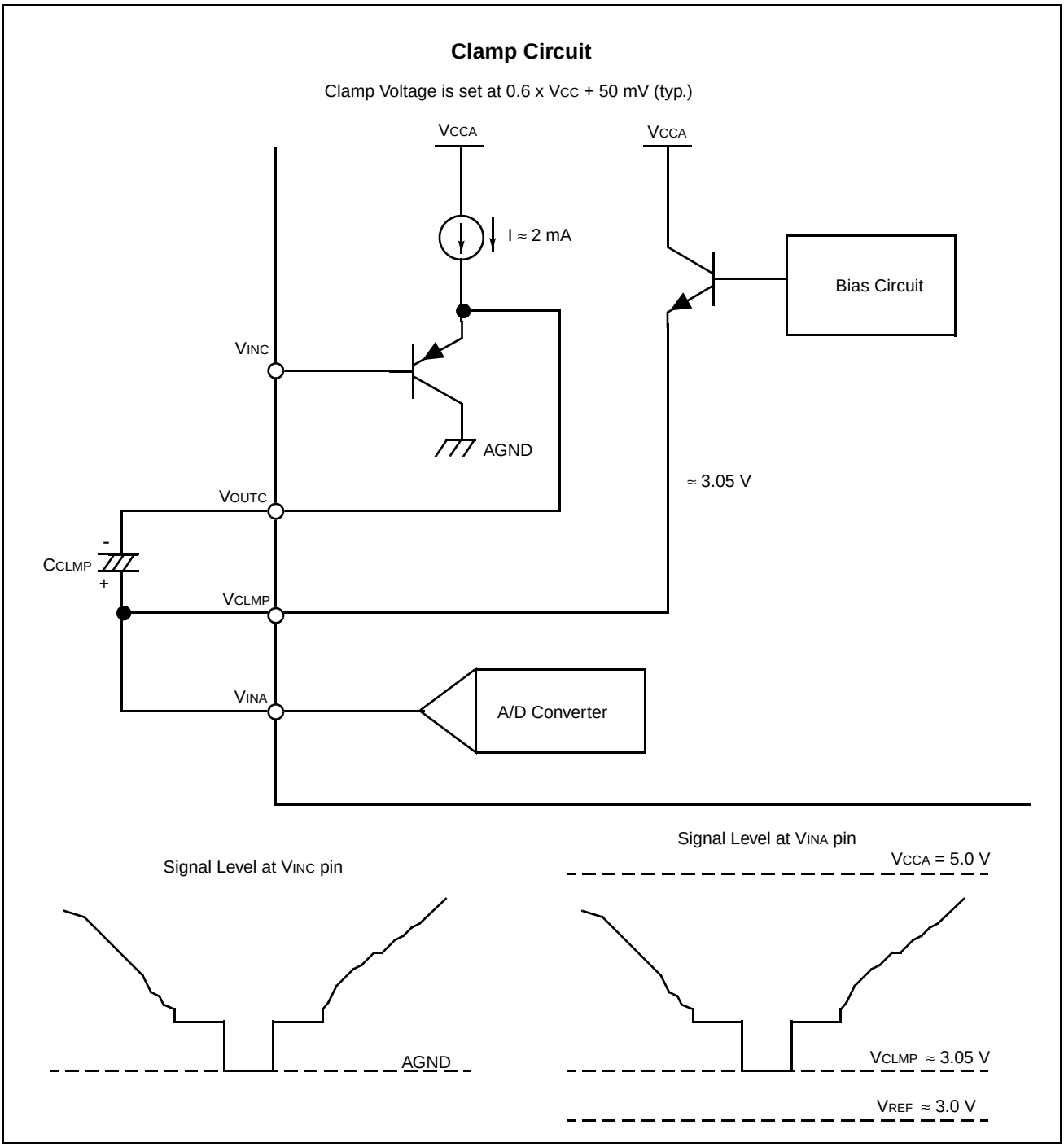

Note: When Clamp Circuit is not applied the signals should be connected as follows:

VINC:	Connect to GND.
VOUTC:	Leave open.
VCLMP:	Leave open.

■ TYPICAL CONNECTION CIRCUIT(Example)

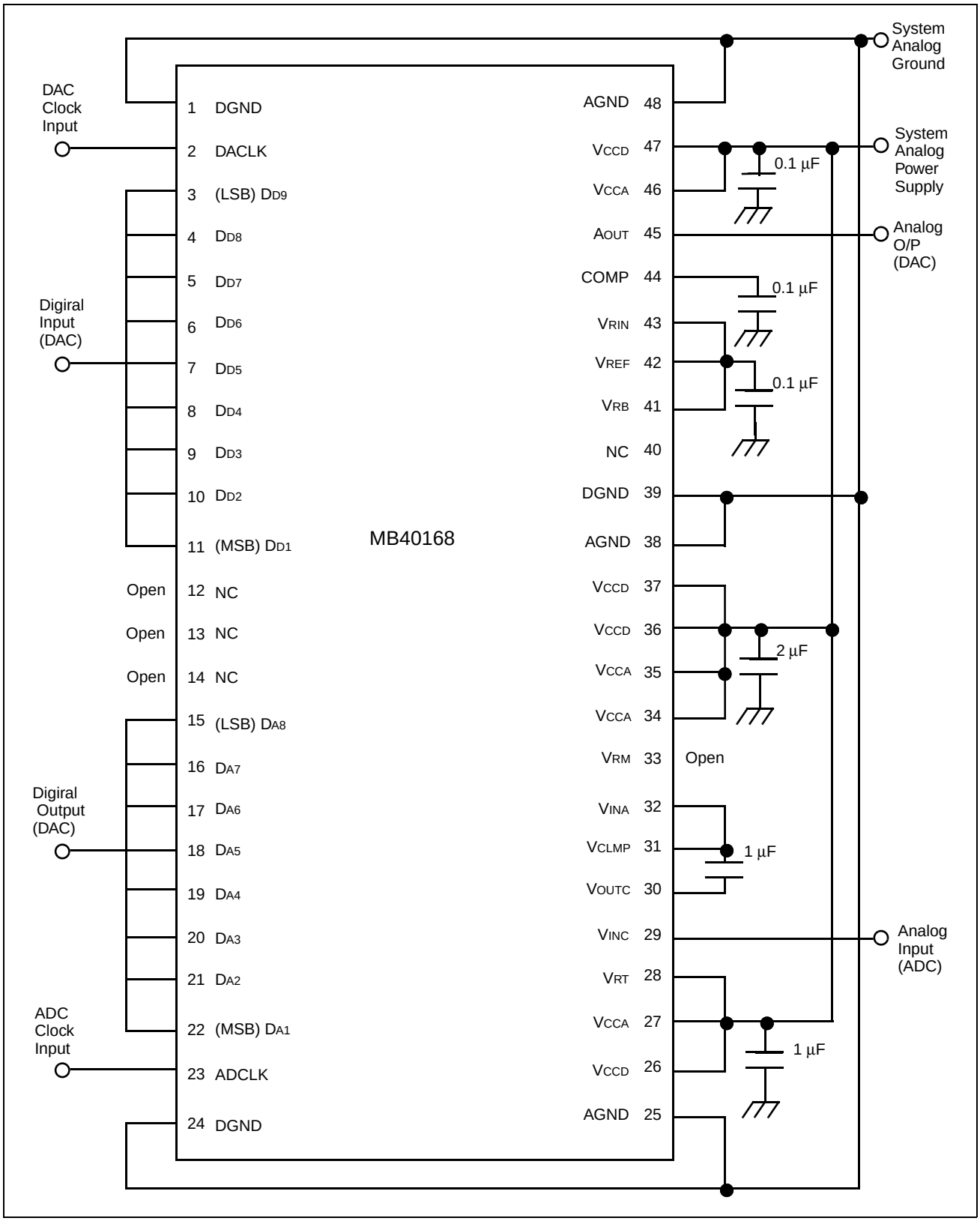

■ NOTES ON PCB LAYOUT

Power Supply Lines

The device's power supply lines (V_{CCA}, V_{CCD}, AGND and DGND) should be laid out as analog lines and should be separated in so far as possible from other digital lines in order to reduce noise. Also the track widths of these lines should be as wide as possible to reduce parasitic impedance.

Coupling Capacitors

The device's power supply lines V_{CCA} and V_{CCD} and the reference voltage pins V_{RIN}, V_{REF}, V_{RB}, and V_{RT} should be decoupled to analog ground by means of approx. 1 µF capacitors which should be placed as close as possible to these pins.

Digital Output Load

The load at the digital outputs should be kept as low as possible to prevent noise in the power supply lines caused by digital output switching. If, due to long wiring, the load becomes large then a buffer with small input capacitance should be inserted to reduce load capacitance.

■ OTHER NOTES ON OPERATION

When using the D/A converter with its V_{RIN} pin connected to the V_{REF} pin, the A/D converter's V_{RB} pin must also be connected to the V_{REF} because otherwise the internal reference voltage generation circuitry cannot output 3 V.

When using the D/A converter with 8 bit resolution the DD9 (LSB) pin should be grounded.

■ PACKAGE DIMENSIONS

48 pin, Plastic SH-DIP
(DIP-48P-M01)

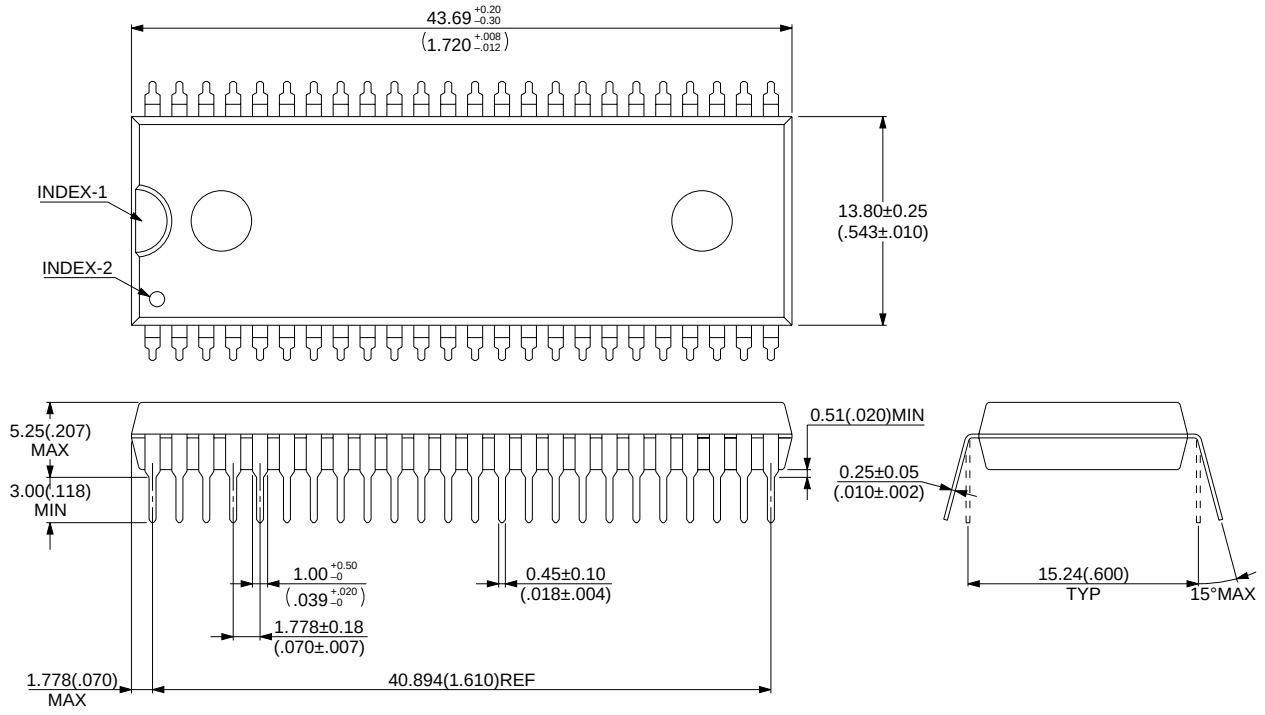

© 1994 FUJITSU LIMITED D48002S-3C-3

Dimensions in mm (inches).

(Continued)

44 pin, Plastic QFP
(FPT-44P-M11)

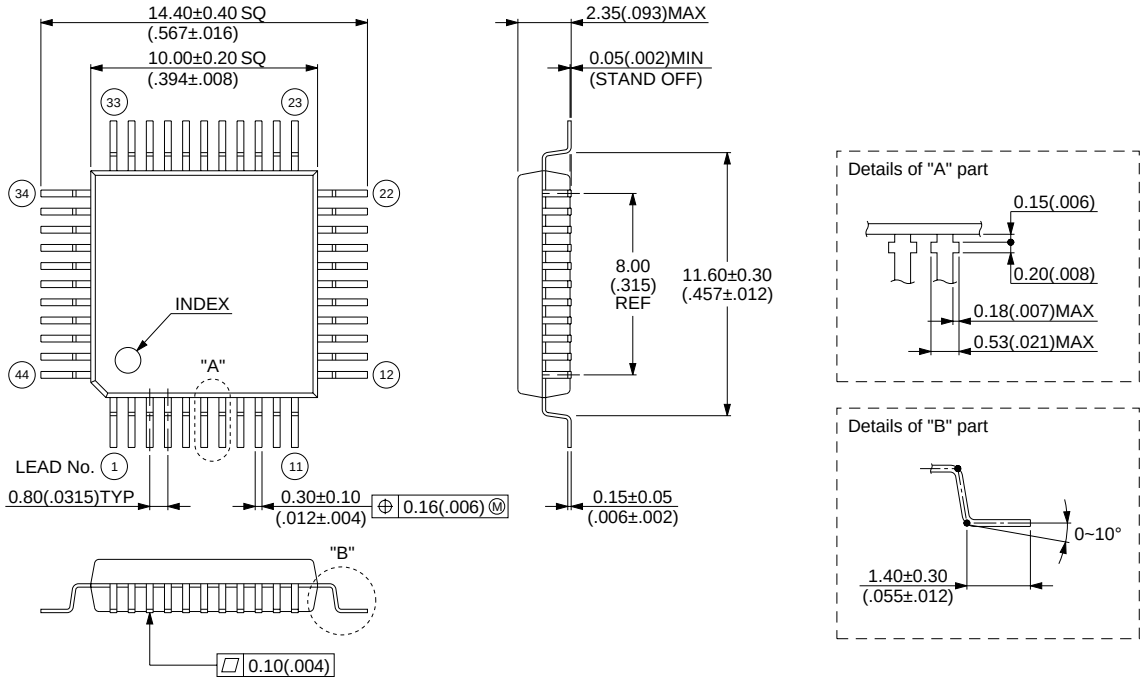

© 1994 FUJITSU LIMITED F44018S-1C-1

Dimensions in mm (inch).

FUJITSU LIMITED

For further information please contact:

Japan
FUJITSU LIMITED
Corporate Global Business Support Division
Electronic Devices
KAWASAKI PLANT, 4-1-1, Kamikodanaka
Nakahara-ku, Kawasaki-shi
Kanagawa 211-88, Japan
Tel: (044) 754-3753
Fax: (044) 754-3329

North and South America
FUJITSU MICROELECTRONICS, INC.
Semiconductor Division
3545 North First Street
San Jose, CA 95134-1804, U.S.A.
Tel: (408) 922-9000
Fax: (408) 432-9044/9045

Europe
FUJITSU MIKROELEKTRONIK GmbH
Am Siebenstein 6-10
63303 Dreieich-Buchschlag
Germany
Tel: (06103) 690-0
Fax: (06103) 690-122

Asia Pacific
FUJITSU MICROELECTRONICS ASIA PTE. LIMITED
#05-08, 151 Lorong Chuan
New Tech Park
Singapore 556741
Tel: (65) 281 0770
Fax: (65) 281 0220

F9703
© FUJITSU LIMITED Printed in Japan

All Rights Reserved.

The contents of this document are subject to change without notice. Customers are advised to consult with FUJITSU sales representatives before ordering.

The information and circuit diagrams in this document presented as examples of semiconductor device applications, and are not intended to be incorporated in devices for actual use. Also, FUJITSU is unable to assume responsibility for infringement of any patent rights or other rights of third parties arising from the use of this information or circuit diagrams.

FUJITSU semiconductor devices are intended for use in standard applications (computers, office automation and other office equipment, industrial, communications, and measurement equipment, personal or household devices, etc.).
CAUTION:
Customers considering the use of our products in special applications where failure or abnormal operation may directly affect human lives or cause physical injury or property damage, or where extremely high levels of reliability are demanded (such as aerospace systems, atomic energy controls, sea floor repeaters, vehicle operating controls, medical devices for life support, etc.) are requested to consult with FUJITSU sales representatives before such use. The company will not be responsible for damages arising from such use without prior approval.

Any semiconductor devices have inherently a certain rate of failure. You must protect against injury, damage or loss from such failures by incorporating safety design measures into your facility and equipment such as redundancy, fire protection, and prevention of over-current levels and other abnormal operating conditions.

If any products described in this document represent goods or technologies subject to certain restrictions on export under the Foreign Exchange and Foreign Trade Control Law of Japan, the prior authorization by Japanese government should be required for export of those products from Japan.