FAIRCHILD SEMICONDUCTOR™

August 1986
Revised March 2000

DM74LS165
8-Bit Parallel In/Serial Output Shift Registers

General Description

This device is an 8-bit serial shift register which shifts data in the direction of Q_A toward Q_H when clocked. Parallel-in access is made available by eight individual direct data inputs, which are enabled by a low level at the shift/load input. These registers also feature gated clock inputs and complementary outputs from the eighth bit.

Clocking is accomplished through a 2-input NOR gate, permitting one input to be used as a clock-inhibit function. Holding either of the clock inputs HIGH inhibits clocking, and holding either clock input LOW with the load input HIGH enables the other clock input. The clock-inhibit input should be changed to the high level only while the clock input is HIGH. Parallel loading is inhibited as long as the load input is HIGH. Data at the parallel inputs are loaded directly into the register on a HIGH-to-LOW transition of the shift/load input, regardless of the logic levels on the clock, clock inhibit, or serial inputs.

Features

- Complementary outputs
- Direct overriding (data) inputs
- Gated clock inputs
- Parallel-to-serial data conversion
- Typical frequency 35 MHz
- Typical power dissipation 105 mW

Ordering Code:

Order Number	Package Number	Package Description
DM74LS165M	M16A	16-Lead Small Outline Integrated Circuit (SOIC), JEDEC MS-012, 0.150 Narrow
DM74LS165WM	M16B	16-Lead Small Outline Intergrated Circuit (SOIC), JEDEC MS-013, 0.300 Wide
DM74LS165N	N16E	16-Lead Plastic Dual-In-Line Package (PDIP), JEDEC MS-001, 0.300 Wide

Devices also available in Tape and Reel. Specify by appending the suffix letter "X" to the ordering code.

Connection Diagram

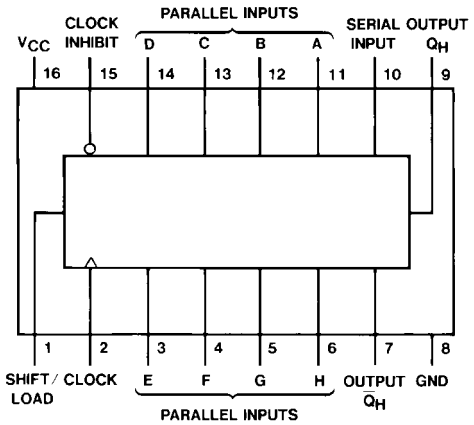

Function Table

Inputs					Internal Outputs		Output
Shift/ Load	Clock Inhibit	Clock	Serial	Parallel A...H	Q_A	Q_B	Q_H
L	X	X	X	a...h	a	b	h
H	L	L	X	X	Q_{A0}	Q_{B0}	Q_{H0}
H	L	↑	H	X	H	Q_{An}	Q_{Gn}
H	L	↑	L	X	L	Q_{An}	Q_{Gn}
H	H	X	X	X	Q_{A0}	Q_{B0}	Q_{H0}

H = HIGH Level (steady state)
L = LOW Level (steady state)
X = Don't Care (any input, including transitions)
↑ = Transition from LOW-to-HIGH level
a...h = The level of steady-state input at inputs A through H, respectively.
Q_{A0}, Q_{B0}, Q_{H0} = The level of Q_A, Q_B, or Q_H, respectively, before the indicated steady-state input conditions were established.
Q_{An}, Q_{Gn} = The level of Q_A or Q_G, respectively, before the most recent ↑ transition of the clock.

Logic Diagram

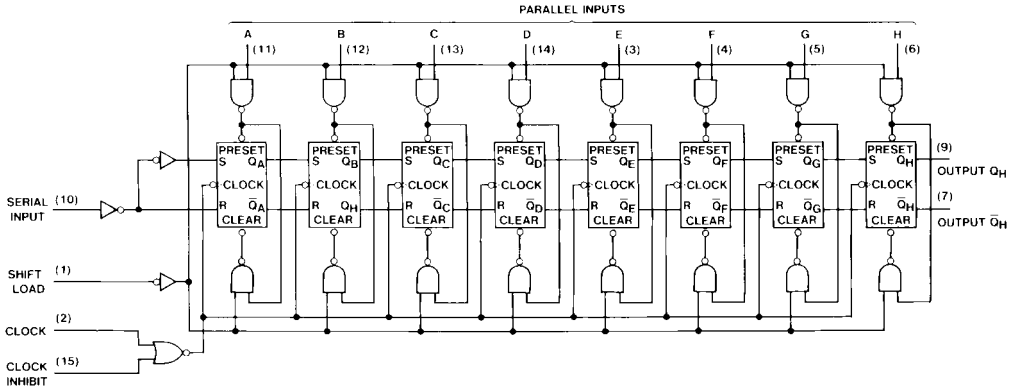

Timing Diagram

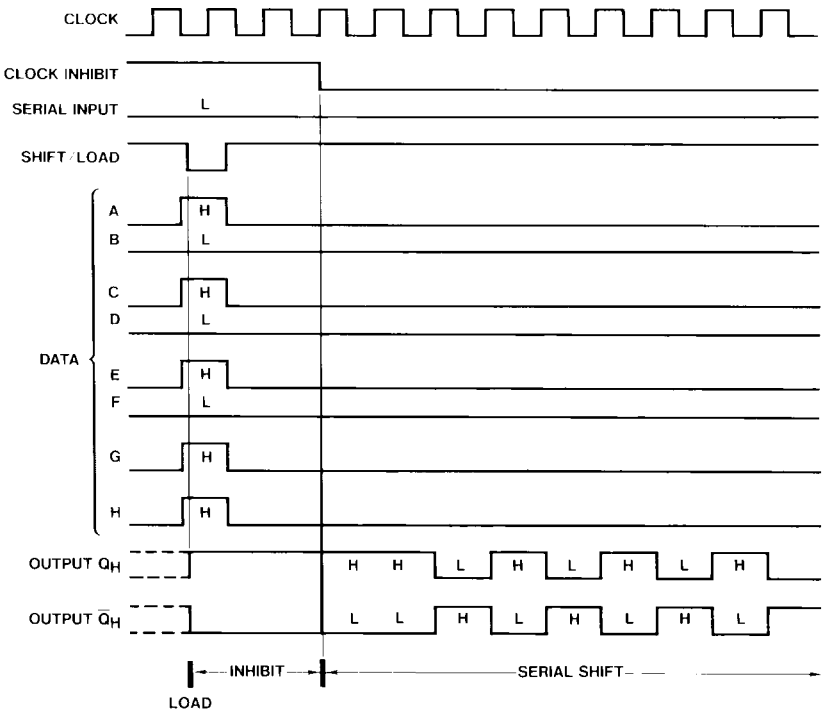

Typical Shift, Load, and Inhibit Sequences

Absolute Maximum Ratings(Note 1)

Supply Voltage	7V
Input Voltage	7V
Operating Free Air Temperature Range	0°C to +70°C
Storage Temperature Range	−65°C to +150°C

Note 1: The "Absolute Maximum Ratings" are those values beyond which the safety of the device cannot be guaranteed. The device should not be operated at these limits. The parametric values defined in the Electrical Characteristics tables are not guaranteed at the absolute maximum ratings. The "Recommended Operating Conditions" table will define the conditions for actual device operation.

Recommended Operating Conditions

Symbol	Parameter		Min	Nom	Max	Units
V_{CC}	Supply Voltage		4.75	5	5.25	V
V_{IH}	HIGH Level Input Voltage		2			V
V_{IL}	LOW Level Input Voltage				0.8	V
I_{OH}	HIGH Level Output Current				−0.4	mA
I_{OL}	LOW Level Output Current				8	mA
f_{CLK}	Clock Frequency (Note 2)		0		25	MHz
f_{CLK}	Clock Frequency (Note 3)		0		20	MHz
t_W	Pulse Width	Clock	25			ns
	(Note 3)	Load	15			
t_{SU}	Setup Time	Parallel	10			ns
	(Note 4)	Serial	20			
		Enable	30			
		Shift	45			
t_H	Hold Time (Note 4)		0			ns
T_A	Free Air Operating Temperature		0		70	°C

Note 2: C_L = 15 pF, R_L = 2 kΩ, T_A = 25°C and V_{CC} = 5V

Note 3: C_L = 50 pF, R_L = 2 kΩ, T_A = 25°C and V_{CC} = 5V

Note 4: T_A = 25°C and V_{CC} = 5V.

Electrical Characteristics

over recommended operating free air temperature range (unless otherwise noted)

Symbol	Parameter	Conditions		Min	Typ (Note 5)	Max	Units
V_I	Input Clamp Voltage	V_{CC} = Min, I_I = −18 mA				−1.5	V
V_{OH}	HIGH Level Output Voltage	V_{CC} = Min, I_{OH} = Max, V_{IL} = Max, V_{IH} = Min		2.7	3.4		V
V_{OL}	LOW Level Output Voltage	V_{CC} = Min, I_{OL} = Max				0.4	V
		V_{IL} = Max, V_{IH} = Min			0.35	0.5	
		I_{OL} = 4 mA, V_{CC} = Min			0.25	0.4	
I_I	Input Current @ Max Input Voltage	V_{CC} = Max, V_I = 7V	Shift/Load			0.3	mA
			Others			0.1	
I_{IH}	HIGH Level Input Current	V_{CC} = Max, V_I = 2.7V	Shift/Load			60	μA
			Others			20	
I_{IL}	LOW Level Input Current	V_{CC} = Max, V_I = 0.4V	Shift/Load			−1.2	mA
			Others			−0.4	
I_{OS}	Short Circuit Output Current	V_{CC} = Max (Note 6)		−20		−100	mA
I_{CC}	Supply Current	V_{CC} = Max (Note 7)			21	36	mA

Note 5: All typicals are at V_{CC} = 5V, T_A = 25° C.

Note 6: Not more than one output should be shorted at a time, and the duration should not exceed one second.

Note 7: With all outputs OPEN, clock inhibit and shift/load at 4.5V, and a clock pulse applied to the CLOCK input, I_{CC} is measured first with the parallel inputs at 4.5V, then again grounded.

Switching Characteristics

at V_{CC} = 5V and T_A = 25°C

Symbol	Parameter	From (Input) To (Output)	C_L = 15 pF		R_L = 2 kΩ, C_L = 50 pF		Units
			Min	Max	Min	Max	
f_{MAX}	Maximum Clock Frequency		25		20		MHz
t_{PLH}	Propagation Delay Time LOW-to-HIGH Level Output	Load to Any Q		35		37	ns
t_{PHL}	Propagation Delay Time HIGH-to-LOW Level Output	Load to Any Q		35		42	ns
t_{PLH}	Propagation Delay Time LOW-to-HIGH Level Output	Clock to Any Q		40		42	ns
t_{PHL}	Propagation Delay Time HIGH-to-LOW Level Output	Clock to Any Q		40		47	ns
t_{PLH}	Propagation Delay Time LOW-to-HIGH Level Output	H to Q_H		25		27	ns
t_{PHL}	Propagation Delay Time HIGH-to-LOW Level Output	H to Q_H		30		37	ns
t_{PLH}	Propagation Delay Time LOW-to-HIGH Level Output	H to $\overline{Q}_H$		30		32	ns
t_{PHL}	Propagation Delay Time HIGH-to-LOW Level Output	H to $\overline{Q}_H$		25		32	ns

Physical Dimensions inches (millimeters) unless otherwise noted

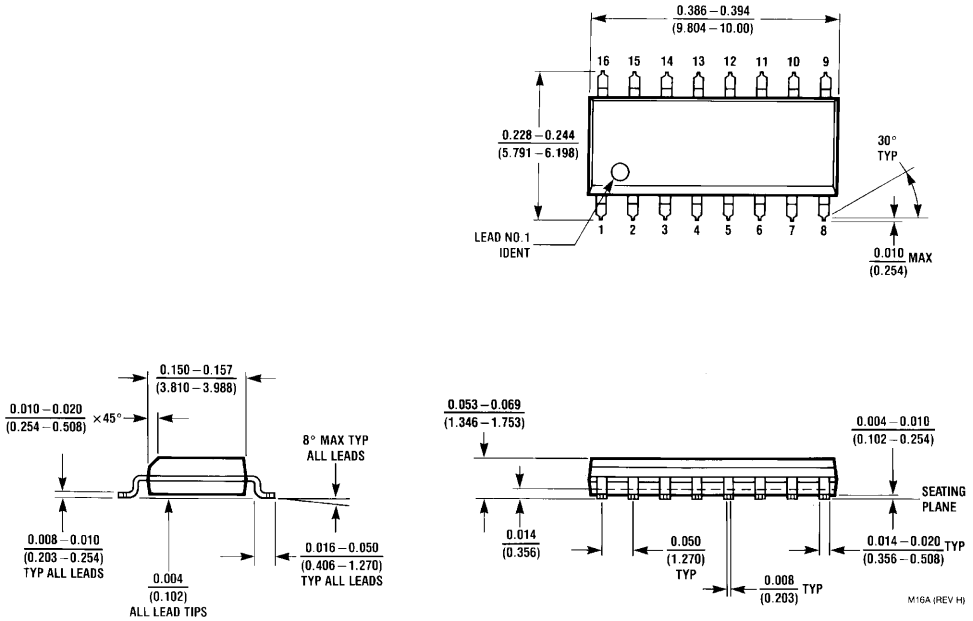

16-Lead Small Outline Integrated Circuit (SOIC), JEDEC MS-012, 0.150 Narrow
Package Number M16A

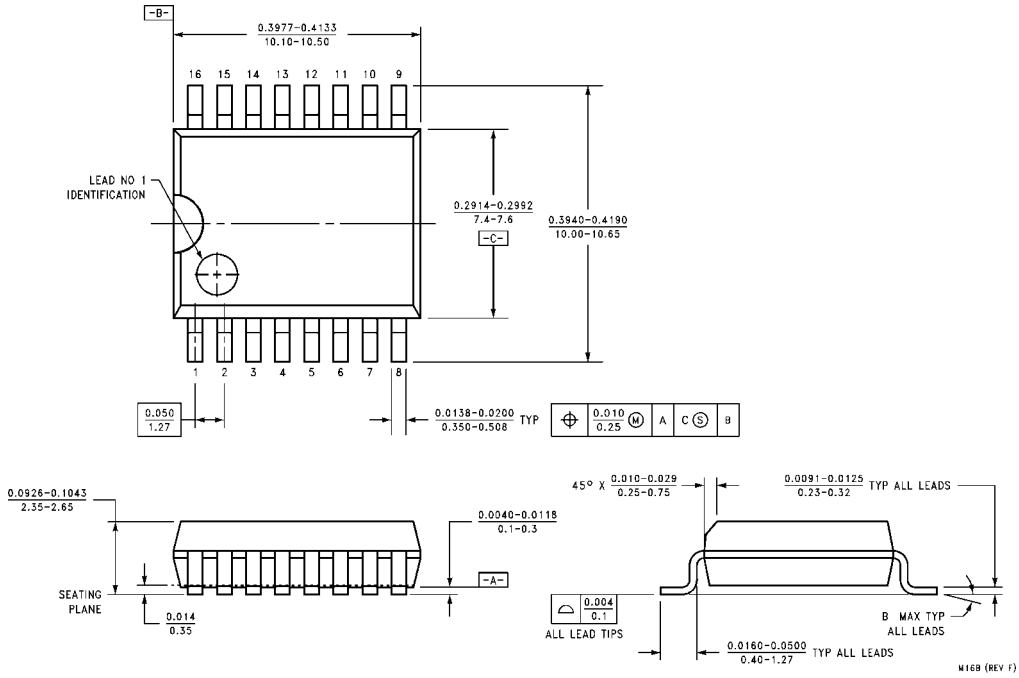

16-Lead Small Outline Intergrated Circuit (SOIC), JEDEC MS-013, 0.300 Wide
Package Number M16B

Physical Dimensions inches (millimeters) unless otherwise noted (Continued)

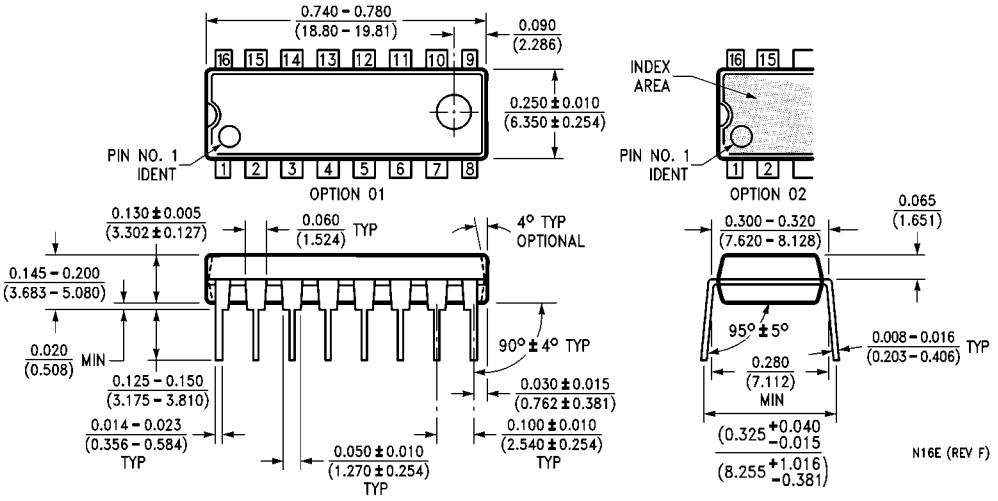

16-Lead Plastic Dual-In-Line Package (PDIP), JEDEC MS-001, 0.300 Wide
Package Number N16E