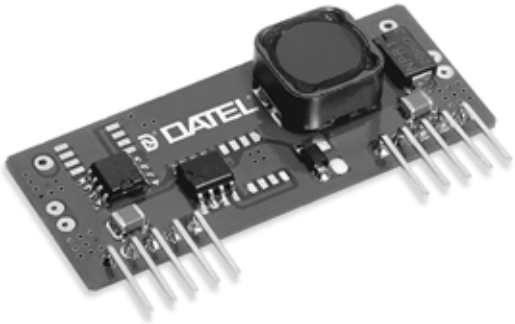

DATEL®
INNOVATION and EXCELLENCE

Single Output
UNS Series

Non-Isolated, 3.3V and 5V 3 Amp, DC/DC Converters

Features

- **Low cost**
- **SIP or DIP packaging**
- **3.3V (10W) or 5V (15W) outputs**
- **Wide range inputs:**
  4.75-13.6V for 3.3V models
  6-16.5V for 5V models
- **High efficiencies, typically 90-92%**
- **Low output noise, 50mVp-p**
- **Remote on/off control**
- **100µA "standby" input current**
- **Output current limiting**
- **EMC compliant**
- **Highly reliable, 100% SMT construction**
- **Conformally coated for harsh environments**

Low cost, high efficiency, wide input voltage range and low output noise define DATEL's new UNS Series of non-isolated, step-down, switching DC/DC converters. The 3.3V- and 5V-output devices are, respectively, 90% and 92% efficient. All models are fully line and load regulated and maintain specified accuracy over the impressively wide input voltage ranges of 4.75 to 13.6 Volts for 3.3V outputs and 6 to 16.5 Volts for 5V outputs. Output ripple and noise are typically 50mVp-p.

UNS devices are fabricated using proven SMT-on-pcb construction techniques. The 3.3V and 5V devices are both available in either lightweight SIP (2" x 0.4" x 0.8") or DIP (2" x 0.8" x 0.4", 600 mil spacing between rows) package configurations. The DIP option is designated by a "D" suffix added to the part number. All models are conformally coated for protection against moisture and dust.

The high efficiency of the UNS Series' fixed-frequency (190kHz) switching design eliminates the need for thermally conductive potting compound. Devices are specified for full-power operation up to ambient temperatures of +50°C. With derating, they operate up to +70°C. Calculated MTBF (MIL-HDBK-217F) is more than 1.6 million hours.

These simple-to-use power converters have no minimum load requirements. They draw 1mA when unloaded and a mere 100µA in the standby mode (On/Off Control turned off). 3.3V models have an output voltage adjustment range of 2.7 to 3.3 Volts. 5V models are adjustable down to 3.0V.

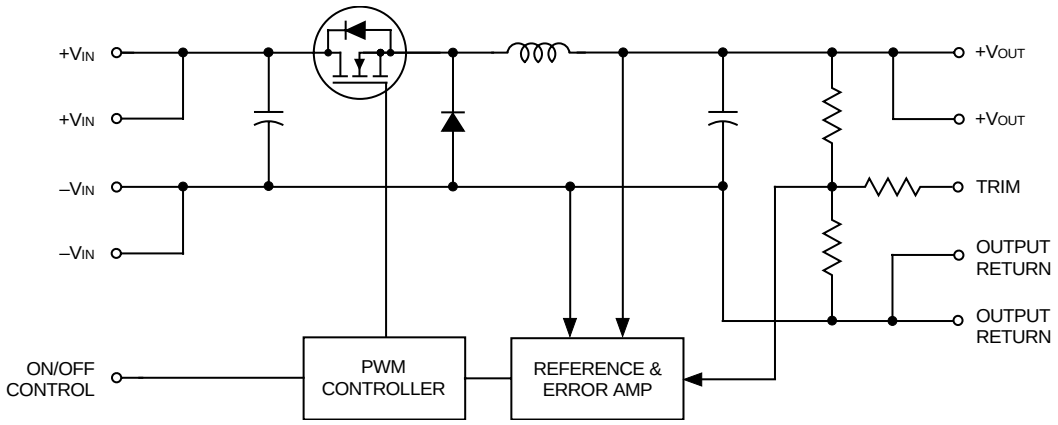

Figure 1. Simplified Schematic

DATEL, Inc., Mansfield, MA 02048 (USA) • Tel: (508)339-3000, (800)233-2765 Fax: (508)339-6356 • Email: sales@datel.com • Internet: www.datel.com

Performance Specifications and Ordering Guide ①

Model ②	Output						Input			Efficiency		Package (Case, Pinout)
	V_{OUT} (Volts)	I_{OUT} (Amps)	R/N (mVp-p) ③		Regulation (Max.) ④		V_{IN} Nom. (Volts)	Range (Volts)	I_{IN} ⑤ (mA)			
			Typ.	Max.	Line	Load				Min.	Typ.	
UNS-3.3/3-D5	3.3	3	50	100	±1.0%	±3.0%	7.5	4.75-13.6	1/1400	--	90%	B1, P18
UNS-3.3/3-D5D	3.3	3	50	100	±1.0%	±3.0%	7.5	4.75-13.6	1/1400	--	90%	B2, P18
UNS-5/3-D12	5	3	50	100	±1.0%	±3.0%	12	6-16.5	1/1330	--	92%	B1, P18
UNS-5/3-D12D	5	3	50	100	±1.0%	±3.0%	12	6-16.5	1/1330	--	92%	B2, P18

① Typical at T_A = +25°C under nominal line voltage and full-load conditions, unless otherwise noted.
② "D" suffix indicates DIP package.
③ Ripple/Noise (R/N) measured over a 20MHz bandwidth with a 100µF external input capacitor and a 220µF external output capacitor. Additional ouput capacitors will lower R/N. See Technical Notes.
④ Listed output regulation specifications describe the total change in output voltage as the input (line) voltage or output (load) current is varied over its full specified range. Typically, line regulation is better than ±0.5% and load regulation is better than ±1.0%. Load regulation applies for 0 to 100% load conditions.
⑤ Nominal line voltage, no-load/full-load conditions.

PART NUMBER STRUCTURE

U NS - 3.3 / 3 - D5 D

Output Configuration:
U = Unipolar

Non-Isolated
SIP packaging

Nominal Output Voltage:
3.3 or 5 Volts

Maximum Output Current
in Amps

Input Voltage Range:
D5 = 4.75-13.6 Volts (7.5V nominal)
D12 = 6-16.5 Volts (12V nominal)

Add "D" suffix for optional DIP package configuration

TEMPERATURE DERATING

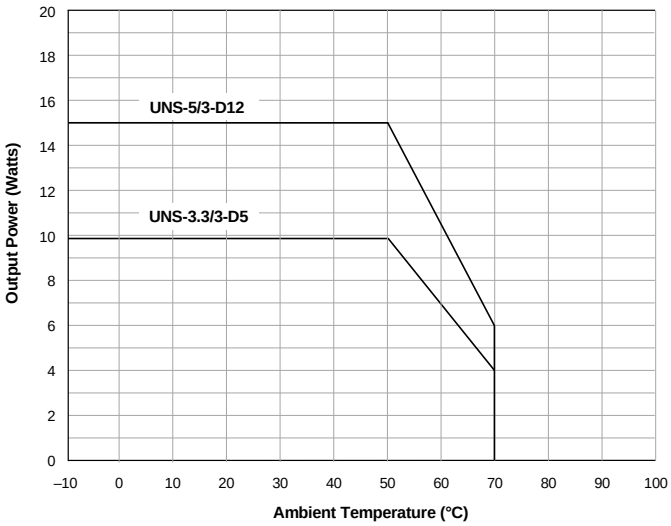

Note: Derating curves apply to both SIP and DIP package configurations

MECHANICAL SPECIFICATIONS

Case B1 (SIP)

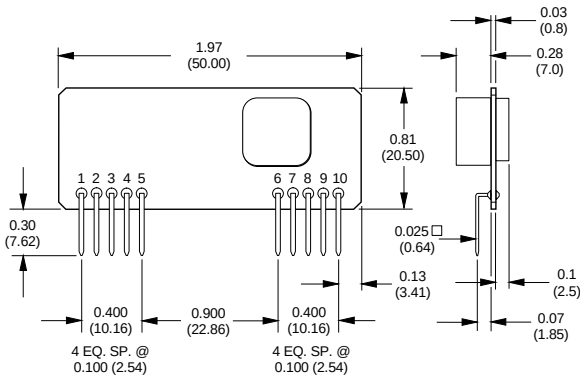

Case B2 (DIP)

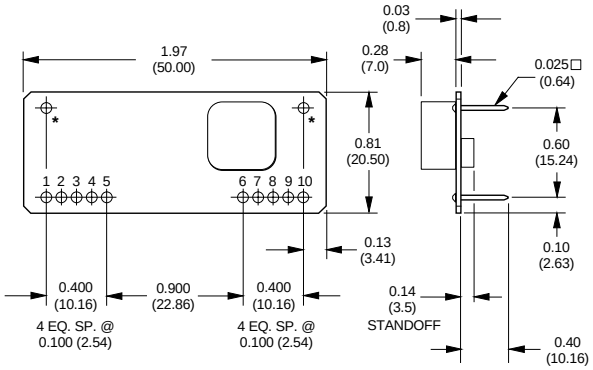

* NO CONNECTION. FOR MECHANICAL STABILITY ONLY.

I/O Connections			
Pin	Function P18	Pin	Function P18
1	+Input	6	Trim
2	+Input	7	Output Rtn.
3	–Input	8	Output Rtn.
4	–Input	9	+Output
5	On/Off Control	10	+Output

Typical @ T_A = +25°C under nominal line voltage and full-load conditions, unless noted. ①

Input	
Input Voltage Range:	
"D5" and "D5D" Models	4.75-13.6 Volts (7.5V nominal)
"D12" and "D12D" Models	6-16.5 Volts (12V nominal)
Input Current	See Ordering Guide
Input Filter Type	Capacitive
Overvoltage Protection	None
Reverse-Polarity Protection	None
On/Off Control (Pin 5) ②	TTL high (or open) = on, low = off
Output	
V_{OUT} Accuracy	±5%, maximum
Temperature Coefficient	±0.01% per °C
Ripple/Noise (20MHz bandwidth) ③	See Ordering Guide
Line/Load Regulation ④	See Ordering Guide
Efficiency	See Ordering Guide
Current Limiting ⑤	Auto-recovery
Dynamic Characteristics	
Transient Response (50% load step)	200µsec max. to ±2% of final value
Switching Frequency	190kHz
Environmental	
Operating Temperature:	
Without Derating	–10 to +50°C
With Derating	to +70°C (See Derating Curve)
Storage Temperature	–25 to +85°C
Physical	
Dimensions: SIP Models	2 x 0.41 x 0.8" (50 x 10.3 x 21mm)
DIP Models ⑥	2 x 0.8 x 0.44" (50 x 21 x 11.3mm)
Shielding	None
Case Connection	None
Pin Material	Gold-plated phosphor bronze
Weight	0.35 ounces (10 grams)

① UNS Series devices require external input/output capacitors to achieve rated performance. Listed specifications assume C_{IN} = 100µF and C_{OUT} = 220µF.
② See Technical Notes.
③ Output Ripple/Noise can be reduced with external capacitors. See Technical Notes.
④ UNS Series converters have no minimum-load requirements.
⑤ Current limiting initiates at approximately 5% above rated load.
⑥ DIP models have a standoff which makes their total above-board height 0.44 inches.

Absolute Maximum Ratings	
Input Voltage:	
"D5" Models	15 Volts
"D12" Models	18 Volts
Input Reverse-Polarity Protection	None. See Technical Notes.
Output Overvoltage Protection	None
Output Current	Current limited. Devices can withstand an output short circuit for brief durations only.
Storage Temperature	–25 to +85°C
Lead Temperature (soldering, 10 sec.)	+300°C

These are stress ratings. Exposure of devices to any of these conditions may adversely affect long-term reliability. Proper operation under conditions other than those listed in the Performance/Functional Specifications Table is not implied.

TECHNICAL NOTES

Input and Output Capacitors

Though UNS Series, non-isolated, DC/DC converters have on-board input and output capacitors (C_{IN} = 6.8µF, C_{OUT} = 6.8µF), the majority of applications will require the installation of additional external I/O capacitance.

The total input capacitance functions as a true energy-storage element, and its optimal value will vary as a function of line voltage. The selected external input capacitor should have both low ESR and low ESL because, as the power converter's input FET switch cycles on and off, the input capacitance must have the ability to instantaneously supply pulses of relatively high current.

Rather than install a large, expensive, on-board capacitor that addresses all possible input-voltage and output-load conditions, DATEL has chosen to leave out the bulk of the input capacitance so that users may select a cost-effective component appropriate to their own application. We use a low-ESR 100µF external input capacitor during production testing and have found 330µF to be a conservative value that works well in the majority of applications.

In addition to their on-board output capacitor, UNS Series devices require the installation of additional output capacitors to achieve rated ripple/noise specifications. External output capacitors should be low-ESR tantalum or electrolytic types, and they should be located as close to the converters as possible. A minimum of 220µF is required to achieve rated ripple/noise specs. Increased capacitance will lower output noise. There are no limitations on output capacitance; however, we have found minimal noise improvements beyond 4700µF.

Output Trimming

5V devices can be trimmed down to 3.0V, and 3.3V devices can be trimmed down to 2.7V using a single external trimpot or fixed resistor. The trimpot should be connected between $+V_{OUT}$ (pins 9 and 10) and Trim (pin 6) as shown in the figure below. The trimpot can be used to determine the value of a single fixed resistor which can then be connected between pins 9 and 10 and 6. Fixed resistors should be metal-film types with relatively low absolute TCR's to ensure stability.

In order to maximize their efficiency, UNS devices employ high-value resistors in their voltage feedback loop. Consequently, the external trimpots must also be high-resistance devices (1-2 megohms). If the trimpots are accidentally turned to their 0Ω stops, it will not damage the converters; however, the output voltage will be pulled down to an unstable level. Use care not to trim the output voltage below the levels indicated in the accompanying table.

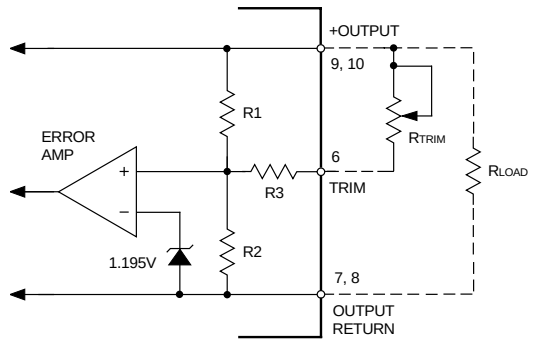

Figure 2. Output Voltage Trimming

Product	UNS-3.3/3	UNS-5/3
Output Voltage Adjustment Range	2.7 to 3.3V	3.0 to 5.0V
R1	68.68kΩ	124.7kΩ
R2	38kΩ	39kΩ
R3	10kΩ	10kΩ
R_{TRIM}	≥160kΩ	≥100kΩ

Table 1. Output Voltage Trim Values

The On/Off Control Pin

For normal operation, pin 5 should be left open. This pin has an internal 250kΩ pull-up resistor to +5V (or to $+V_{IN}$ if $+V_{IN}$ < 5V). For dynamic control of the converters' on/off functionality, a TTL logic high (+2.4V minimum, +5V maximum or $+V_{IN}$ maximum if $+V_{IN}$ < 5V, 100µA max.) applied to pin 5 enables the converter, and a quasi-TTL logic low (0 to +0.5V, 100µA max.) disables the converter. Control voltages should be referenced to pins 3 and 4 (–Input). For best results, use a mechanical relay or open-collector logic.

When the converter is turned off, its input "standby" current will be approximately 100µA. Applying a voltage that is greater than V_{IN} to the On/Off Control pin, or applying any voltage to this pin when no input power is applied to the converter, may cause permanent damage to the converter.

TYPICAL PERFORMANCE CURVES

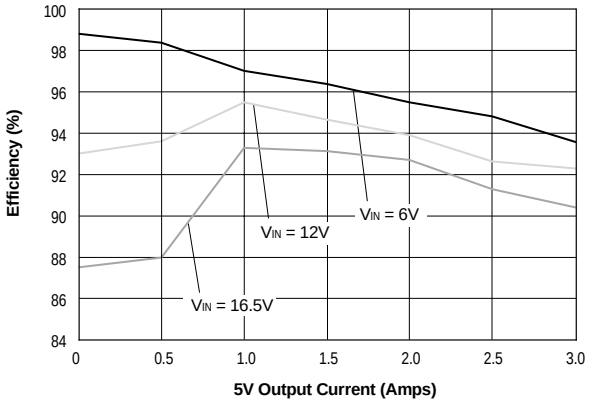

Efficiency vs. Output Current and Input Voltage (Model UNS-5/3)

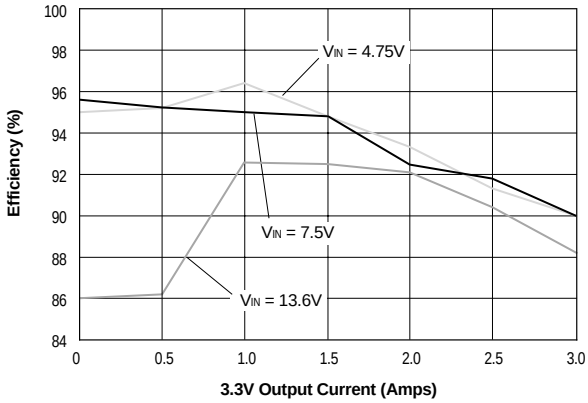

Efficiency vs. Output Current and Input Voltage (Model UNS-3.3/3)

DATEL, Inc. 11 Cabot Boulevard, Mansfield, MA 02048-1151
Tel: (508) 339-3000 (800) 233-2765 Fax: (508) 339-6356
Internet: www.datel.com Email: sales@datel.com
Data Sheet Fax Back: (508) 261-2857

DATEL (UK) LTD. Tadley, England Tel: (01256)-880444
DATEL S.A.R.L. Montigny Le Bretonneux, France Tel: 01-34-60-01-01
DATEL GmbH München, Germany Tel: 89-544334-0
DATEL KK Tokyo, Japan Tel: 3-3779-1031, Osaka Tel: 6-354-2025

DATEL®

INNOVATION and EXCELLENCE

NON-ISOLATED DC/DC CONVERTER SELECTION GUIDE

2.5V SINGLE OUTPUT, NON-ISOLATED

Output Current (Amps, Max.)	Input Voltage, Nominal (Range) (Volts)	Package ①		Regulation		Ripple/ Noise ② (mVp-p)	Efficiency (Min.)	DATEL Model Number	Data Sheet @ www.datel.com
		Dimensions (Inches)	Case, Pinout	Line (Max.)	Load (Max.)				
2	5 (4.75-5.5)	1 x 1 x 0.45	C7A, P9	±0.25%	±0.5%	30	83%	UNR-2.5/2-D5	UNR, 5W
8	5 (4.75-5.5)	2 x 1 x 0.39	C5A, P9	±0.1%	±0.5%	40	86%	UNR-2.5/8-D5	UNR, 20/25W
	12 (10.4-13.6)	2 x 1 x 0.48	C5C, P9	±0.1%	±0.6%	40	85%	UNR-2.5/8-D12	UNR, 20/25W
10	5 (4.75-5.5)	2 x 1 x 0.39	C5A, P9	±0.1%	±0.5%	40	85%	UNR-2.5/10-D5	UNR, 20/25W
	12 (10.4-13.6)	2 x 1 x 0.48	C5C, P9	±0.1%	±0.6%	40	83%	UNR-2.5/10-D12	UNR, 20/25W
12	5 (4.75-5.5)	2 x 1 x 0.44	C5B, P9	±0.1%	±0.5%	40	84%	UNR-2.5/12-D5	UNR, 30W
20	5 (4.5-5.5)	2 x 2 x 0.49	C21, P26	±0.1%	±1.0%	60	85%	UNR-2.5/20-D5 ③	Contact DATEL

3.3V SINGLE OUTPUT, NON-ISOLATED

3	5 (4.75-5.5)	1 x 1 x 0.45	C7A, P9	±0.4%	±0.5%	30	86%	UNR-3.3/3-D5	UNR, 10W
	7.5 (4.75-13.6)	2 x 0.4 x 0.8 ④	B1, P18	±1.0%	±3.0%	50	90% ⑥	UNS-3.3/3-D5	UNS, 10/15W
	7.5 (4.75-13.6)	2 x 0.8 x 0.4 ⑤	B2, P18	±1.0%	±3.0%	50	90% ⑥	UNS-3.3/3-D5D	UNS, 10/15W
	12 (10.4-13.6)	1 x 1 x 0.45	C7A, P9	±0.25%	±0.5%	100	87%	UNR-3.3/3-D12	UNR, 10W
8	5 (4.75-5.5)	2 x 1 x 0.39	C5A, P9	±0.1%	±0.5%	40	88%	UNR-3.3/8-D5	UNR, 26/33W
	5 (4.75-5.5)	2 x 1 x 0.39	C16A, P23	±0.1%	±0.5%	40	88%	UNR-3.3/8-D5T ③ ⑧	Contact DATEL
	5 (4.75-5.5)	2 x 0.4 x 0.53 ⑨	B3, P27	±0.1%	±0.5%	40	88%	USN-3.3/8-D5 ③	Contact DATEL
	12 (10.4-13.6)	2 x 1 x 0.48	C5C, P9	±0.1%	±0.6%	60	86%	UNR-3.3/8-D12	UNR, 26/33W
	12 (10.4-13.6)	2 x 1 x 0.48	C16C, P23	±0.1%	±0.6%	60	86%	UNR-3.3/8-D12T ③ ⑧	Contact DATEL
10	5 (4.75-5.5)	2 x 1 x 0.39	C5A, P9	±0.1%	±0.5%	40	86%	UNR-3.3/10-D5	UNR, 26/33W
	5 (4.75-5.5)	2 x 1 x 0.39	C16A, P23	±0.1%	±0.5%	40	86%	UNR-3.3/10-D5T ③ ⑧	Contact DATEL
	5 (4.75-5.5)	2 x 0.4 x 0.53 ⑨	B3, P27	±0.1%	±0.5%	40	86%	USN-3.3/10-D5 ③	Contact DATEL
	12 (10.4-13.6)	2 x 1 x 0.48	C5C, P9	±0.1%	±0.6%	60	85%	UNR-3.3/10-D12	UNR, 26/33W
	12 (10.4-13.6)	2 x 1 x 0.48	C16C, P23	±0.1%	±0.6%	60	85%	UNR-3.3/10-D12T ③ ⑧	Contact DATEL
12	5 (4.75-5.5)	2 x 1 x 0.44	C5B, P9	±0.1%	±0.5%	40	87%	UNR-3.3/12-D5	UNR, 40W
20	5 (4.5-5.5)	2 x 2 x 0.49	C21, P26	±0.1%	±1.0%	50	87%	UNR-3.3/20-D5 ③	Contact DATEL

5V SINGLE OUTPUT, NON-ISOLATED

3	12 (6-16.5)	2 x 0.4 x 0.8 ④	B1, P18	±1.0%	±3.0%	50	92% ⑥	UNS-5/3-D12	UNS, 10/15W
	12 (6-16.5)	2 x 0.8 x 0.4 ⑤	B2, P18	±1.0%	±3.0%	50	92% ⑥	UNS-5/3-D12D	UNS, 10/15W
5 ⑦	12 (10.4-13.6)	2 x 1 x 0.48	C13, P21	±0.25%	±0.5%	60	87%	UNR-5/5-D12	UNR, 25W

Listed specifications are typical at T_A = +25°C under nominal line voltage and full-load conditions, unless noted.

① See individual product data sheets for mechanical specifications and pinouts.
② Ripple/Noise is specified over a 20MHz bandwidth.
③ Listed specifications for these products are preliminary.
④ 10-pin SIP package.
⑤ 10-pin DIP package.
⑥ Listed specification is a typical.
⑦ Output voltage is user adjustable from 3.3 to 6V.
⑧ Output voltage is user adjustable from 1.4 to 3.6V.
⑨ Industry-standard, 11-pin SIP package.

DATEL, Inc., Mansfield, MA, USA • Tel: (508)339-3000, (800)233-2765 • Fax: (508)339-6356 • Email: sales@datel.com

Rev. C 6/99