CONEXANT™

Single-Chip Solution for DVB-T Systems

CX22700

Conexant's CX22700 is a single-chip Coded Orthogonal Frequency-Division Multiplex (COFDM) demodulator/decoder solution for both 2K and 8K terrestrial digital video broadcast-terrestrial (DVB-T) systems.

Offering a high level of integration, along with the ability to sample the incoming signal at a first intermediate frequency (IF), the CX22700 is a cost-effective device. In addition, its small package outline makes the CX22700 ideal for use in tuner modules.

Input Signal

The CX22700 can accept an input signal centered either at a First IF of approximately 36.167 MHz (Figure 1) or a Second IF of approximately 4.57 MHz (Figure 2). This is normally an analog signal, which is sampled using the internal 10-bit analog-to-digital converter (ADC). The CX22700 uses digital filters to remove adjacent channel signals (e.g., NICAM). The tuner's automatic gain control (AGC) is controlled via a single-pin sigma-delta feedback. Only a simple RC filter is required to generate the analog control voltage.

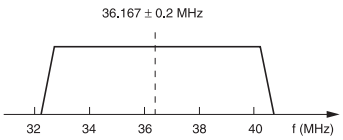

Figure 1. CX22700 input signal spectrum (First IF Sampling)

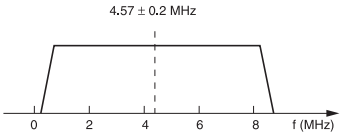

Figure 2. CX22700 input signal spectrum (Second IF Sampling)

Distinguishing Features

- Implements entire DVB-T standard
- High-IF sampling leading to low BOM
- Fast channel acquisition
- No real-time software requirement
- Field-proven high performance

Single-Chip Solution for DVB-T Systems

CX22700

From IF Input to MPEG Output

The CX22700 performs all the functions required to produce an MPEG transport stream output from the IF input. The time domain adapter enables the chip to address 6-, 7-, and 8-MHz bandwidth channels as well as adapt to different IFs, sample timing and frequency offsets. In addition, the time domain adapter removes adjacent channel interference, such as NICAM, and removes the cyclic prefix prior to the Fast Fourier Transform (FFT). During channel acquisition, the time domain adapter uses a set of algorithms that allow frequency, sample timing, and guard interval lock to be achieved quickly and reliably before switching to a different set of algorithms, which provide good tracking performance.

After the FFT, a common phase error correction is applied prior to channel estimation and correction. Scattered and continual pilot carriers are used to correct channel distortion, fading, and phase noise within the carrier bandwidth. The channel estimate is also used to provide channel state information (CSI), which is passed on to the Viterbi decoder, where it is used to improve performance by identifying bits from data carriers that have been subject to severe fading. CSI can also be used to mask bits from data carriers that are particularly affected by co-channel analog interference (e.g., PAL/SECAM). The CX22700 uses proprietary memory-efficient algorithms to produce the channel estimate. By default, the CX22700 initially determines all transmission parameters (including 2K/8K transmission mode and guard interval) from the received signal. These parameters are stored and used to reduce the time needed for subsequent channel acquisitions.

The CX22700 can be interfaced directly to all commonly available MPEG transport demultiplexer chips, as well as directly to a DVB common interface. The data rate is smoothed to remove gaps introduced by the COFDM guard interval and variation in processing

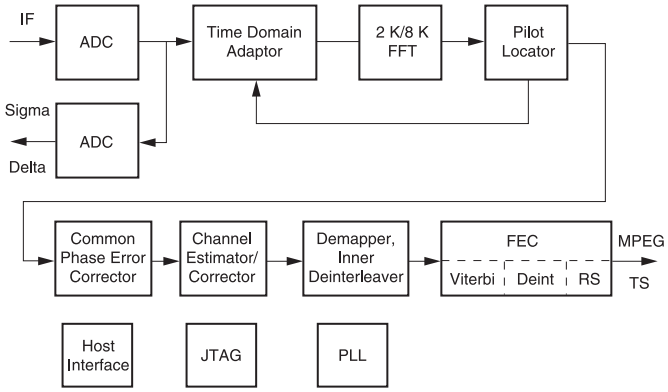

Figure 3. CX22700 functional block diagram

time within the forward error correction (FEC) circuitry. This allows a stable clock reference to be extracted from the transport stream more quickly, further reducing the overall time before the viewer sees a picture.

Applications

Figures 4 and 5 show two possible applications of the CX22700 using a conventional tuner architecture. Figure 4 is an example of First IF sampling, where an input signal centered on 36.167 +/– 0.2 MHz is sampled directly. This method considerably reduces the component count in the tuner, allowing a mixer and oscillator to be replaced by an amplifier, which provides the required input level for the ADC.

Many standard tuners have an IF output at about 4.57 MHz (32/7 MHz), so the CX22700 can also sample a signal centered on this frequency. Selection is made using either a pin on the device (First IF) or a register. In both cases, adjacent channel interference at the same level as the COFDM signal is removed by digital filtering inside the CX22700.

Figures 4 and 5 also show how a two-wire serial host interface bus to the tuner can be switched inside the CX22700. The connection to the tuner is switched on or off by setting a register bit inside the CX22700, reducing noise in the tuner caused by activity on the bus.

If users do not need some of the more advanced features of the CX22700, then they do not need to connect it to a host processor. In this case, some of the pins of the parallel host interface data bus are used to select the mode of operation (e.g., channel bandwidth, spectrum inversion, and IF sampling). However, Conexant can provide proven reference designs which integrate all the software required for a complete receiver design.

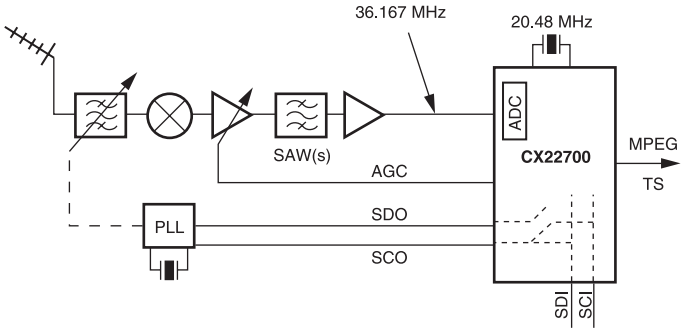

Figure 4. CX22700 possible application (First IF Sampling)

What is COFDM?

Coded Orthogonal Frequency Division Multiplexing (COFDM) is the method adopted by the Digital Video Broadcasting (DVB) Group for digital terrestrial broadcasting. (Here, "terrestrial" refers to land-based, as opposed to satellite broadcasting). To understand what this acronym means, let's break it down into its component parts. Frequency Division Multiplexing (FDM) refers to the division of a communications channel into different frequency bands. This is a commonly used technique in analog TV broadcasting, in which different TV stations broadcast on different frequencies. But in analog TV, the carrier frequencies are spaced 6 or 8 MHz apart; in DVB-T, there are 2,048 carriers (with "2K" mode) or 8,192 carriers (using "8K" mode) in a given 6 or 8 MHz band. Using conventional techniques, carriers spaced this close together would interfere with each other. But because the carriers are "orthogonal," or non-overlapping, they do not.
As a TV signal travels between the transmitter and the receiver, it may encounter interference from a variety of sources. In addition, echoes occur as the signal is reflected from hills, buildings, trees and moving objects. These echoes interfere with the signal and cause it to fade. By coding the signal using powerful error-correction techniques (the "Coded" in COFDM), data in carriers that have been destroyed by interference can be recovered. Because of these capabilities, COFDM has proven itself superior to other methods of digital terrestrial broadcasting.

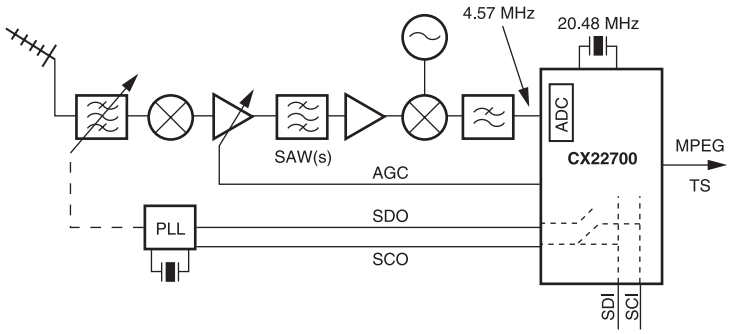

Figure 5. CX22700 possible application (Second IF Sampling)

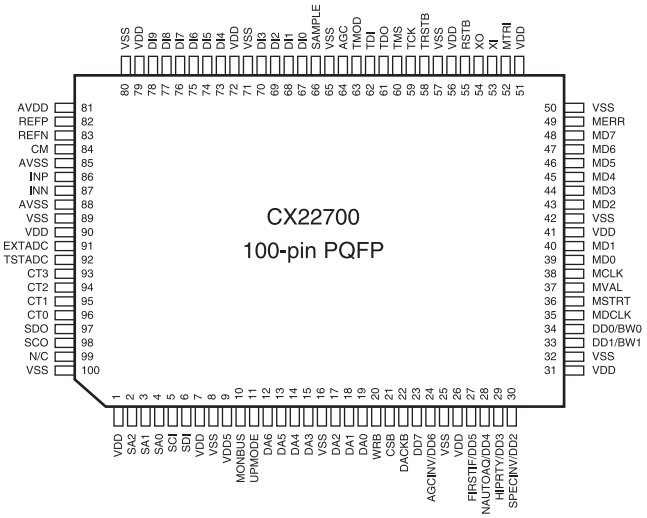

Figure 6. CX22700 pin diagram

Product Features

- Implements complete DVB-T (ETS 300 744) standard
- Digital Television Group (DTG) and EACEM compliant
- 2K and 8K transmission modes
- All non-hierarchical and hierarchical modulation constellations
- Smart single frequency network channel acquisition
- Decoded transmission parameter signaling (TPS) data can be used and made available to the host CPU
- Integrated ADC
- Internal digital AFC loop (no feedback to tuner)
- Internal digital clock recovery loop (fixed frequency input, no need for VCXO)
- Single-pin ∑ D AGC feedback to tuner
- Channel estimation and correction
- Common phase error correction
- Fast channel acquisition (<100 ms)
- Maintains and uses channel state information (CSI)
- Serial (I^2C compatible) and parallel host interfaces
- Can achieve automatic lock from initial frequency offsets of over 200 KHz
- 6-, 7- and 8-MHz channel support to address all global markets
- MPEG transport stream output suitable for direct connection to transport Demux chips
- Minimal host software required (in some cases none)
- 100-pin PQFP
- JTAG boundary scan

Further Information
literature@conexant.com
(800) 854-8099 (North America)
(949) 483-6996 (International)
Order # 100744A
00-0272
Digital Infotainment
Printed in USA

World Headquarters
Conexant Systems, Inc.
4311 Jamboree Road
Newport Beach, CA
92660-3007
Phone: (949) 483-4600
Fax 1: (949) 483-4078
Fax 2: (949) 483-4391

Americas

U.S. Northwest/Pacific Northwest – Santa Clara
Phone: (408) 249-9696
Fax: (408) 249-7113

U.S. Southwest – Los Angeles
Phone: (805) 376-0559
Fax: (805) 376-8180

U.S. Southwest – Orange County
Phone: (949) 483-9119
Fax: (949) 483-9090

U.S. Southwest – San Diego
Phone: (858) 713-3374
Fax: (858) 713-4001

U.S. North Central – Illinois
Phone: (630) 773-3454
Fax: (630) 773-3907

U.S. South Central – Texas
Phone: (972) 733-0723
Fax: (972) 407-0639

U.S. Northeast – Massachusetts
Phone: (978) 367-3200
Fax: (978) 256-6868

U.S. Southeast – North Carolina
Phone: (919) 858-9110
Fax: (919) 858-8669

U.S. Southeast – Florida/ South America
Phone: (727) 799-8406
Fax: (727) 799-8306

U.S. Mid-Atlantic – Pennsylvania
Phone: (215) 244-6784
Fax: (215) 244-9292

Canada – Ontario
Phone: (613) 271-2358
Fax: (613) 271-2359

Europe

Europe Central – Germany
Phone: +49 89 829-1320
Fax: +49 89 834-2734

Europe North – England
Phone: +44 1344 486444
Fax: +44 1344 486555

Europe – Israel/Greece
Phone: +972 9 9524000
Fax: +972 9 9573732

Europe South – France
Phone: +33 1 41 44 36 51
Fax: +33 1 41 44 36 90

Europe Mediterranean – Italy
Phone: +39 02 93179911
Fax: +39 02 93179913

Europe – Sweden
Phone: +46 (0) 8 5091 4319
Fax: +46 (0) 8 590 041 10

Europe – Finland
Phone: +358 (0) 9 85 666 435
Fax: +358 (0) 9 85 666 220

Asia – Pacific

Taiwan
Phone: (886-2) 2-720-0282
Fax: (886-2) 2-757-6760

Australia
Phone: (61-2) 9869 4088
Fax: (61-2) 9869 4077

China – Central
Phone: 86-21-6361-2515
Fax: 86-21-6361-2516

China – South
Phone: (852) 2 827-0181
Fax: (852) 2 827-6488

China – South (Satellite)
Phone: (86) 755-5182495

China – North
Phone: (86-10) 8529-9777
Fax: (86-10) 8529-9778

India
Phone: (91-11) 692-4789
Fax: (91-11) 692-4712

Korea
Phone: (82-2) 565-2880
Fax: (82-2) 565-1440

Korea (Satellite)
Phone: (82-53) 745-2880
Fax: (82-53) 745-1440

Singapore
Phone: (65) 737 7355
Fax: (65) 737 9077

Japan
Phone: (81-3) 5371 1520
Fax: (81-3) 5371 1501