Table I. Analog Input Configuration Summary

Input Connection	Coupling	Input Span (V)	Input Range (V) VINA[1]	VINB[1]	Figure #	Comments
Single-Ended	DC	2	0 to 2	1	19, 20	Best for stepped input response applications, requires ±5 V op amp.
		2 × VREF	0 to 2 × VREF	VREF	19, 20	Same as above but with improved noise performance due to increase in dynamic range. Headroom/settling time requirements of ±5 op amp should be evaluated.
		4	0 to 4	2.0	19, 20	Optimum noise performance, excellent SNR performance, often requires low distortion op amp with VCC > +5 V due to its headroom issues.
		2 × VREF	2.0 – VREF to 2.0 + VREF	2.0	30	Optimum THD performance with VREF = 1. Single supply operation (i.e., +5 V) for many op amps.
Single-Ended	AC	2 or 2 × VREF	0 to 1 or 0 to 2 × VREF	1 or VREF	21, 22	
		4	0.5 to 4.5	2.5	22	Optimum noise performance, excellent THD performance, ability to use ±5 V op amp.
		2 × VREF	2.0 – VREF to 2.0 + VREF	2.0	21	Flexible input range, Optimum THD performance with VREF = 1. Ability to use either +5 V or ±5 V op amp.
Differential (via Transformer) or Amplifier	AC/DC	2	2 to 3	3 to 2	23, 24	Optimum full-scale THD and SFDR performance well beyond the A/Ds Nyquist frequency. Preferred mode for undersampling applications.
		2 × VREF	2.0 – VREF/2 to 2.0 + VREF/2	2.0 + VREF/2 to 2.0 – VREF/2	23, 24	Same as above with the exception that full-scale THD and SFDR performance can be traded off for better noise performance.
		4.0	1.5 to 3.5	3.5 to 1.5	23, 24	Optimum noise performance.

NOTE
[1]VINA and VINB can be interchanged if signal inversion is required.

Table II. Reference Configuration Summary

Reference Operating Mode	Input Span (VINA–VINB) (V p-p)	Required VREF (V)	Connect	To
INTERNAL INTERNAL INTERNAL	2 4 2 ≤ SPAN ≤ 4 AND SPAN = 2 × VREF	1 2 1 ≤ VREF ≤ 2.0 AND VREF = (1 + R1/R2)	SENSE SENSE R1 R2	VREF REFCOM VREF AND SENSE SENSE AND REFCOM
EXTERNAL (NONDYNAMIC)	2 ≤ SPAN ≤ 4	1 ≤ VREF ≤ 2.0	SENSE VREF	AVDD EXT. REF.
EXTERNAL (DYNAMIC)	2 ≤ SPAN ≤ 4	CAPT and CAPB Externally Driven	SENSE VREF EXT. REF. EXT. REF.	AVDD AVSS CAPT CAPB

DRIVING THE ANALOG INPUTS

The AD9224 has a highly flexible input structure allowing it to interface with single-ended or differential input interface circuitry. The applications shown in Driving the Analog Inputs and Reference Configurations sections, along with the information presented in Input and Reference Overview of this data sheet, give examples of both single-ended and differential operation. Refer to Tables I and II for a list of the different possible input and reference configurations and their associated figures in the data sheet.

The optimum mode of operation, analog input range, and associated interface circuitry will be determined by the particular applications performance requirements as well as power supply options. For example, a dc-coupled single-ended input would be appropriate for most data acquisition and imaging applications. Also, many communication applications that require a dc coupled input for proper demodulation can take advantage of the single-ended distortion performance of the AD9224. The input span should be configured so the system's performance objectives and the headroom requirements of the driving op amp are simultaneously met.

Differential modes of operation (ac or dc coupled input) provide the best THD and SFDR performance over a wide frequency range. *Differential operation should be considered for the most demanding spectral based applications* (e.g., direct IF-to-digital conversion). See Figures 23, 24 and section on Differential Mode of Operation. Differential input characterization was performed for this data sheet using the configuration shown in Figure 24.

Single-ended operation requires that VINA be ac or dc coupled to the input signal source, while VINB of the AD9224 be biased to the appropriate voltage corresponding to a midscale code transition. Note that signal inversion may be easily accomplished by transposing VINA and VINB. Most of the single-ended specifications for the AD9224 were characterized using Figure 21 circuitry with input spans of 4 V and 2 V as well as V_{CM} = 2.5 V.

Differential operation requires that VINA and VINB be simultaneously driven with two equal signals that are in and out of phase versions of the input signal. Differential operation of the AD9224 offers the following benefits: (1) Signal swings are smaller and therefore linearity requirements placed on the input signal source may be easier to achieve, (2) Signal swings are smaller and therefore may allow the use of op amps which may otherwise have been constrained by headroom limitations, (3) Differential operation minimizes even-order harmonic products, and (4) Differential operation offers noise immunity based on the device's common-mode rejection.

As is typical of most IC devices, exceeding the supply limits will turn on internal parasitic diodes resulting in transient currents within the device. Figure 18 shows a simple means of clamping an ac or dc coupled single-ended input with the addition of two series resistors and two diodes. An optional capacitor is shown for ac coupled applications. Note that a larger series resistor could be used to limit the fault current through D1 and D2 but should be evaluated since it can cause a degradation in overall performance. A similar clamping circuit could also be used for each input if a differential input signal is being applied. The diodes might cause nonlinearity in the signal. Careful evaluation should be performed on the diodes used.

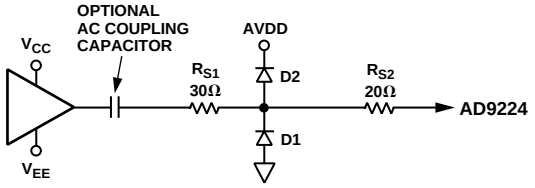

Figure 18. Simple Clamping Circuit

SINGLE-ENDED MODE OF OPERATION

The AD9224 can be configured for single-ended operation using dc or ac coupling. In either case, the input of the A/D must be driven from an operational amplifier that will not degrade the A/D's performance. Because the A/D operates from a single supply, it will be necessary to level shift ground-based bipolar signals to comply with its input requirements. Both dc and ac coupling provide this necessary function, but each method results in different interface issues which may influence the system design and performance.

Single-ended operation is often limited by the availability driving op amps. Very low distortion op amps that provide great performance out to the Nyquist frequency of the converter are hard to find. Compounding the problem, for dc coupled single-ended applications, is the inability of the many high performance amplifiers to maintain low distortions as their outputs approach their positive output voltage limit (i.e., 1 dB compression point). For this reason, it is recommended that applications requiring high performance dc coupling use the single-ended-to-differential circuit shown in Figure 23.

DC COUPLING AND INTERFACE ISSUES

Many applications require the analog input signal to be dc coupled to the AD9224. An operational amplifier can be configured to rescale and level shift the input signal so that it is compatible with the selected input range of the A/D. The input range to the A/D should be selected on the basis of system performance objectives as well as the analog power supply availability since this will place certain constraints on the op amp selection.

Many of the new high performance op amps are specified for only ±5 V operation and have limited input/output swing capabilities. The selected input range of the AD9224 should be considered with the headroom requirements of the particular op amp to prevent clipping of the signal. Also, since the output of a dual supply amplifier can swing below absolute minimum (–0.3 V), clamping its output should be considered in some applications.

In some applications, it may be advantageous to use an op amp specified for single supply +5 V operation since it will inherently limit its output swing to within the power supply rails. Amplifiers like the AD8041 and AD8011 are useful for this purpose but their low bandwidths will limit the AD9224's performance. High performance amplifiers (±5 V) such as the AD9631, AD9632, AD8056 or AD8055 allow the AD9224 to be configured for larger input spans which will improve the ADC's noise performance.

Op amp circuits using a noninverting and inverting topologies are discussed in the next section. Although not shown, the noninverting and inverting topologies can be easily configured as part of an antialiasing filter by using a Sallen-Key or Multiple-Feedback topology. An additional R-C network can be inserted between the op amp's output and the AD9224 input to provide a filter pole.

Simple Op Amp Buffer

In the simplest case, the input signal to the AD9224 will already be biased at levels in accordance with the selected input range. It is simply necessary to provide an adequately low source impedance for the VINA and VINB analog pins of the A/D. Figure 19 shows the recommended configuration a single-ended drive using an op amp. In this case, the op amp is shown in a noninverting unity gain configuration driving the VINA pin. The internal reference drives the VINB pin. Note that the addition of a small series resistor of 30 Ω to 100 Ω connected to VINA and VINB will be beneficial in nearly all cases. Refer to the Analog Input Operation section for a discussion on resistor selection. Figure 19 shows the proper connection for a 0 V to 4 V input range. Alternative single ended ranges of 0 V to 2 × VREF can also be realized with the proper configuration of VREF (refer to the Using the Internal Reference section). Headroom limitations of the op amp must always be considered.

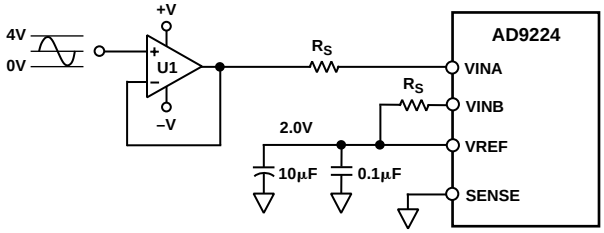

Figure 19. Single-Ended AD9224 Op Amp Drive Circuit

Op Amp with DC Level-Shifting

Figure 20 shows a dc-coupled level-shifting circuit employing an op amp, A1, to sum the input signal with the desired dc set. Configuring the op amp in the inverting mode with the given resistor values results in an ac signal gain of –1. If the signal inversion is undesirable, interchange the VINA and VINB connections to reestablish the original signal polarity. The dc voltage at VREF sets the common-mode voltage of the AD9224. For example, when VREF = 1.0 V, the input level from the op amp will also be centered around 1.0 V. The use of ratio matched, thin-film resistor networks will minimize gain and offset errors. Also, an optional pull-up resistor, RP, may be used to reduce the output load on VREF to less than 1 mA maximum.

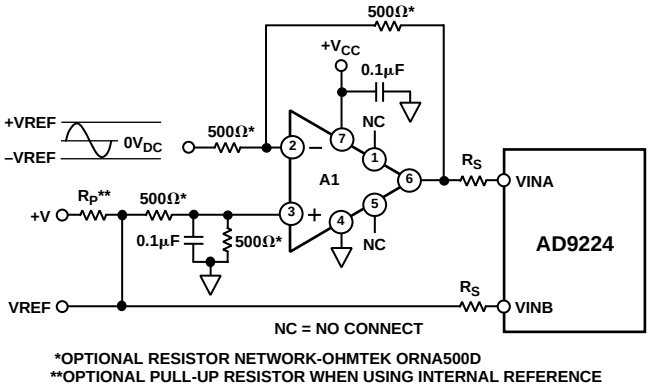

Figure 20. Single-Ended Input with DC-Coupled Level Shift

AC COUPLING AND INTERFACE ISSUES

For applications where ac coupling is appropriate, the op amp's output can be easily level-shifted via a coupling capacitor. This has the advantage of allowing the op amp's common-mode level to be symmetrically biased to its midsupply level (i.e. $(V_{CC} + V_{EE})/2$). Op amps that operate symmetrically with respect to their power supplies typically provide the best ac performance as well as greatest input/output span. Various high speed/performance amplifiers that are restricted to +5 V/–5 V operation and/or specified for +5 V single-supply operation can be easily configured for the 4 V or 2 V input span of the AD9224. A differential input connection should be considered for optimum ac performance.

Simple AC Interface

Figure 21 shows a typical example of an ac-coupled, single-ended configuration. The bias voltage shifts the bipolar, ground-referenced input signal to approximately AVDD/2. The value for C1 and C2 will depend on the size of the resistor, R. The capacitors, C1 and C2, are a 0.1 µF ceramic and 10 µF tantalum capacitor in parallel to achieve a low cutoff frequency while maintaining a low impedance over a wide frequency range. The combination of the capacitor and the resistor form a high-pass filter with a high-pass –3 dB frequency determined by the equation,

$$f_{-3\,dB} = 1/(2 \times \pi \times R \times (C1 + C2))$$

The low impedance VREF voltage source both biases the VINB input and provides the bias voltage for the VINA input. Figure 21 shows the VREF configured for 2.0 V thus the input range of the A/D is 0 V to 4 V. Other input ranges could be selected by changing VREF.

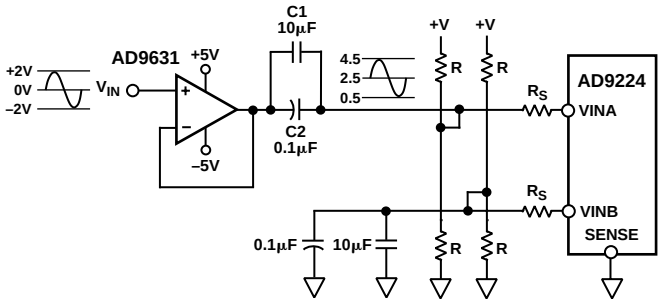

Figure 21. AC-Coupled Input

Alternative AC Interface

Figure 22 shows a flexible ac-coupled circuit that can be configured for different input spans. Since the common-mode voltage of VINA and VINB are biased to midsupply (V_{CM}) independent of VREF, VREF can be pin strapped or reconfigured to achieve input spans between 2 V and 4 V p-p. The AD9224's CMRR, along with the symmetrical coupling R-C networks, will reject both power supply variations and noise. V_{CM} establishes the common-mode voltage. V_{CM}'s source impedance is 5 kΩ. The capacitors, C1 and C2, are typically a 0.1 µF ceramic and 10 µF tantalum capacitor in parallel to achieve a low cutoff frequency while maintaining a low impedance over a wide frequency range. R_S isolates the buffer amplifier from the A/D input. The optimum performance is preserved because VINA and VINB are driven via symmetrical R-C networks. The $f_{-3\,dB}$ point can be approximated by the equation,

$$f_{-3\,dB} = \frac{1}{2\pi \times 6K + (C1 + C2)}$$

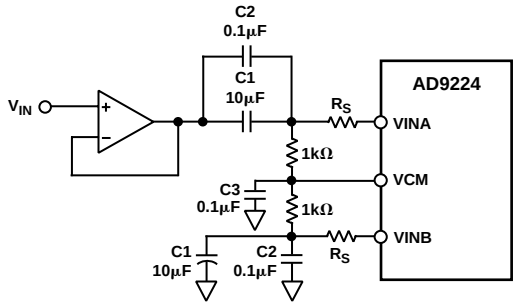

Figure 22. AC-Coupled Input-Flexible Input Span, V_{CM} = 2.5 V

OP AMP SELECTION GUIDE

Op amp selection for the AD9224 is highly dependent on a particular application. In general, the performance requirements of any given application can be characterized by either time domain or frequency domain parameters. In either case, one should carefully select an op amp that preserves the performance of the A/D. This task becomes challenging when one considers the AD9224's high performance capabilities coupled with other extraneous system level requirements such as power consumption and cost.

The ability to select the optimal op amp may be further complicated by either limited power supply availability and/or limited acceptable supplies for a desired op amp. Newer, high performance op amps typically have input and output range limitations in accordance with their lower supply voltages. As a result, some op amps will be more appropriate in systems where ac-coupling is allowable. When dc-coupling is required, op amps without headroom constraints such as rail-to-rail op amps or ones where larger supplies can be used should be considered. The following section describes some op amps currently available from Analog Devices. The system designer is always encouraged to contact the factory or local sales office to be updated on Analog Devices latest amplifier product offerings. Highlights of the areas where the op amps excel and where they may limit the performance of the AD9224 is also included.

When single-ended, dc coupling is needed. The use of the AD8056 in a differential configuration (Figure 23) is highly recommended.

AD8055: $f_{-3\,dB}$ = 300 MHz.
Low cost. Best used for driving single-ended ac coupled configuration.
Limit: THD is compromised when output is not swinging about 0 V.

AD8056: Dual Version of above amp.
Perfect for single-ended to differential configuration (see Figure 23). Harmonics cancel each other in differential drive, making this amplifier highly recommended for a single-ended input signal source. Handles input signals past the 20 MHz Nyquist frequency.

AD9631: $f_{-3\,dB}$ = 250 MHz.
Moderate cost.
Good for single-ended drive applications when signal is anywhere between 0 V and 3 V.
Limits: THD is compromised above 8 MHz.

DIFFERENTIAL MODE OF OPERATION

Since not all applications have a signal preconditioned for differential operation, there is often a need to perform a single-ended-to-differential conversion. In systems that do not need to be dc coupled, an RF transformer with a center tap is the best method to generate differential inputs for the AD9224. It provides all the benefits of operating the A/D in the differential mode without contributing additional noise or distortion. An RF transformer also has the added benefit of providing electrical isolation between the signal source and the A/D.

An improvement in THD and SFDR performance can be realized by operating the AD9224 in the differential mode. The performance enhancement between the differential and single-ended mode is most noteworthy as the input frequency approaches and goes beyond the Nyquist frequency (i.e., $f_{IN} > F_S/2$).

The circuit shown in Figure 23 is an ideal method of applying a differential dc drive to the AD9224. We have used this configuration to drive the AD9224 from 2 V to 4 V spans at frequencies approaching Nyquist, with performance numbers matching those shown on the Specification pages of this data sheet (gathered through a transformer). The dc input is shifted to a dc point swinging symmetrically about the reference voltage. The optional resistor will provide additional current if more reference drive is required.

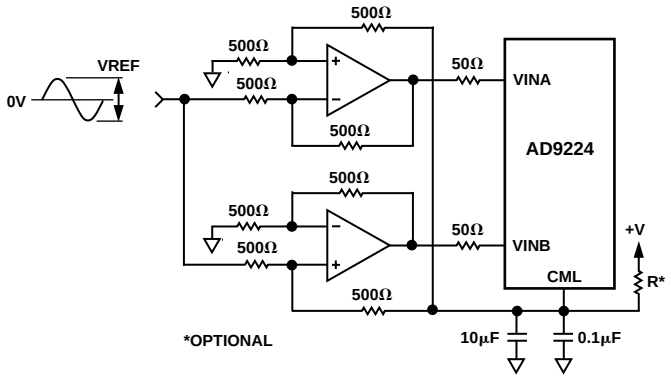

Figure 23. Direct Coupled Drive Circuit with AD8056 Dual Op Amps

The driver circuit shown in Figure 23 is optimized for dc coupling applications requiring optimum distortion performance. This differential op amp driver circuit is configured to convert and level shift a 2 V p-p single-ended, ground referenced signal to a 4 V p-p differential signal centered at the VREF level of the ADC. The circuit is based on two op amps that are configured as matched unity gain difference amplifiers. The single-ended input signal is applied to opposing inputs of the difference amplifiers, thus providing differential drive. The common-mode offset voltage is applied to the noninverting resistor leg of each difference amplifier providing the required offset voltage. The common-mode offset can be varied over a wide span without any serious degradation in distortion performance as shown in Figure 25a, thus providing some flexibility in improving output compression distortion from some ±5 V op amps with limited positive voltage swing.

To protect the AD9224 from an undervoltage fault condition from op amps specified for ±5 V operation, two diodes to AGND can be inserted between each op amp output and the AD9224 inputs. The AD9224 will inherently be protected against any overvoltage condition if the op amps share the same positive power supply (i.e., AVDD) as the AD9224. Note, the gain accuracy and common-mode rejection of each difference amplifier in this driver circuit can be enhanced by using a matched thin-film resistor network (i.e., Ohmtek ORNA5000F) for the op amps. The AD9224's small signal bandwidth is 120 MHz, hence any noise falling within the baseband bandwidth of the AD9224 will degrade its overall noise performance.

The noise performance of each unity gain differential driver circuit is limited by its inherent noise gain of two. For unity gain op amps ONLY, the noise gain can be reduced from two to one beyond the input signal's passband by adding a shunt capacitor, C_F, across each op amp's feedback resistor. This will essentially establish a low-pass filter, which reduces the noise gain to one beyond the filter's $f_{-3\ dB}$ while simultaneously bandlimiting the input signal to $f_{-3\ dB}$. Note, the pole established by this filter can also be used as the real pole of an antialiasing filter.

Figure 24 shows the schematic of the suggested transformer circuit. The circuit uses a Minicircuits RF transformer, model T4-1T, which has an impedance ratio of four (turns ratio of 2). The schematic assumes that the signal source has a 50 Ω source impedance. The 1:4 impedance ratio requires the 200 Ω secondary termination for optimum power transfer and VSWR. The center tap of the transformer provides a convenient means of level shifting the input signal to a desired common-mode voltage.

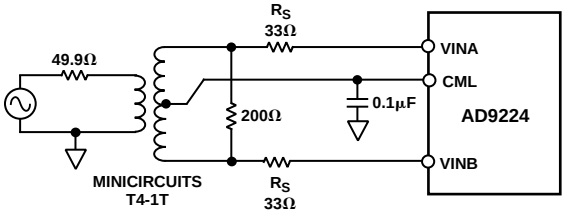

Figure 24. Transformer Coupled Input

This (Figure 24) configuration was used to gather all of the differential data on the Specifications pages.

Transformers with other turns ratios may also be selected to optimize the performance of a given application. For example, a given input signal source or amplifier may realize an improvement in distortion performance at reduced output power levels and signal swings. For example, selecting a transformer with a higher impedance ratio (e.g., Minicircuits T16-6T with a 1:16 impedance ratio) effectively "steps up" the signal level thus further reducing the driving requirements of signal source.

Referring to Figure 24, a series resistor, R_S, was inserted between the AD9224 and the secondary of the transformer. The value of 33 Ω was selected to specifically optimize both the THD and SNR performance of the A/D. R_S and the internal capacitance help provide a low-pass filter to block high frequency noise.

The AD9224 can be easily configured for either a 2 V p-p input span or 4.0 V p-p input span by setting the internal reference (see Table II). Other input spans can be realized with two external gain setting resistors as shown in Figure 28 of this data sheet. Figure 25a demonstrates the AD9224's high degree of linearity and THD over a wide range of common-mode voltages.

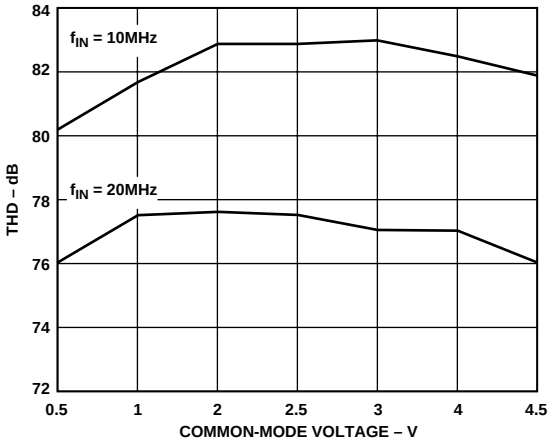

Figure 25a. THD vs. Common-Mode Voltage (AIN = 2 V Differential)

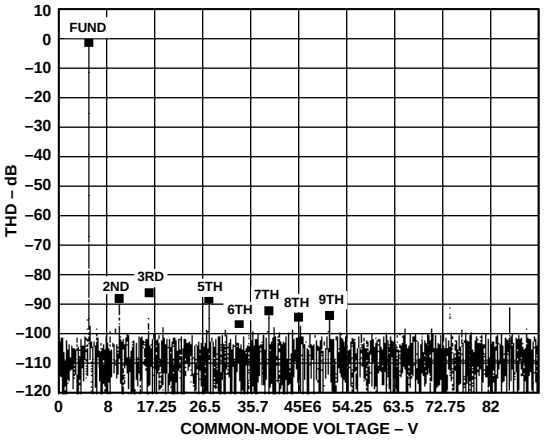

Figure 25b. Frequency Domain Plot F_{IN} = 5 MHz, F_S = 40 MHz (A_{IN} = 2 V Differential)

REFERENCE CONFIGURATIONS

The figures associated with this section on internal and external reference operation do not show recommended matching series resistors for VINA and VINB for the purpose of simplicity. Please refer to the Driving the Analog Inputs section for a discussion of this topic. Also, the figures do not show the decoupling network associated with the CAPT and CAPB pins. Please refer to the Reference Operation section for a discussion of the internal reference circuitry and the recommended decoupling network shown in Figure 17.

USING THE INTERNAL REFERENCE

Single-Ended Input with 0 to 2 × VREF Range

Figure 26a shows how to connect the AD9224 for a 0 V to 2 V or 0 V to 4 V input range via pin strapping the SENSE pin. An intermediate input range of 0 to 2 × VREF can be established using the resistor programmable configuration in Figure 28.

In either case, both the midscale voltage and input span are directly dependent on the value of VREF. More specifically, the midscale voltage is equal to VREF while the input span is equal to 2 × VREF. Thus, the valid input range extends from 0 to 2 × VREF. When VINA is ≤ 0 V, the digital output will be 000 Hex; when VINA is ≥ 2 × VREF, the digital output will be FFF Hex.

Shorting the VREF pin directly to the SENSE pin places the internal reference amplifier in unity-gain mode and the resultant VREF output is 1 V. Therefore, the valid input range is 0 V to 2 V. However, shorting the SENSE pin directly to the REFCOM pin configures the internal reference amplifier for a gain of 2.0 and the resultant VREF output is 2.0 V. Thus, the valid input range becomes 0 V to 4 V. The VREF pin should be bypassed to the REFCOM pin with a 10 µF tantalum capacitor in parallel with a low-inductance 0.1 µF ceramic capacitor.

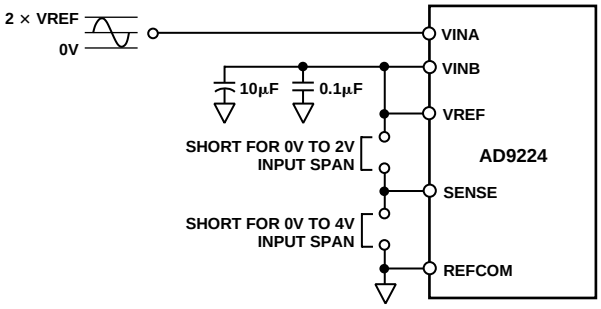

Figure 26a. Internal Reference—2 V p-p Input Span, V_{CM} = 1 V, or 4 V p-p Input Span

Figure 26b illustrates the relation between reference voltage and THD. Note that optimal performance occurs when the reference voltage is set to 1.5 V (input span = 3 V).

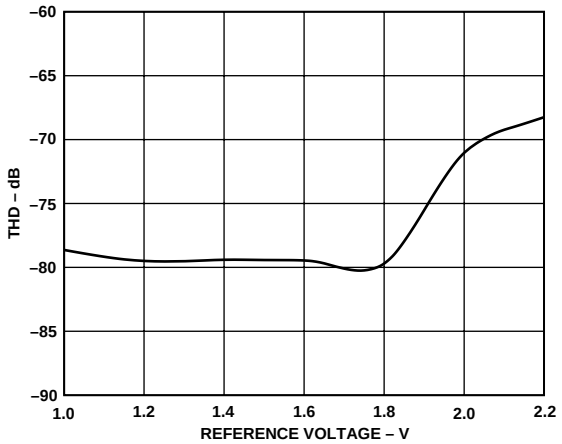

Figure 26b. THD vs. Reference Voltage, F_S = 40 MHz, F_{IN} = 10 MHz (Differential)

Figure 27 shows the single-ended configuration that gives good dynamic performance (SINAD, SFDR). To optimize dynamic specifications, center the common-mode voltage of the analog input at approximately by 2.5 V by connecting VINB to a low impedance 2.5 V source. As described above, shorting the VREF pin directly to the SENSE pin results in a 1 V reference voltage and a 2 V p-p input span. The valid range for input signals is 1.5 V to 3.5 V. The VREF pin should be bypassed to the REFCOM pin with a 10 µF tantalum capacitor in parallel with a low-inductance 0.1 µF ceramic capacitor.

This reference configuration could also be used for a differential input in which VINA and VINB are driven via a transformer as shown in Figure 24. In this case, the common-mode voltage, V_{CM}, is set at midsupply by connecting the transformer's center tap to CML of the AD9224. VREF can be configured for 1.0 V or 2.0 V by connecting SENSE to either VREF or REFCOM respectively. Note that the valid input range for each of the differential inputs is one half of the single-ended input and thus becomes V_{CM} – VREF/2 to V_{CM} + VREF/2.

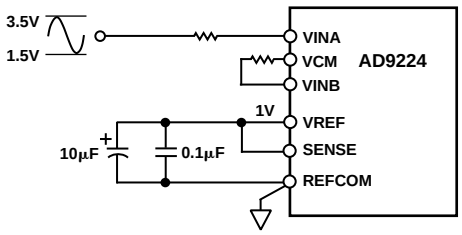

Figure 27. Internal Reference—2 V p-p Input Span, V_{CM} = 2.5 V

Resistor Programmable Reference

Figure 28 shows an example of how to generate a reference voltage other than 1.0 V or 2.0 V with the addition of two external resistors and a bypass capacitor. Use the equation,

$$VREF = 1\ V \times (1 + R1/R2),$$

to determine appropriate values for R1 and R2. These resistors should be in the 2 kΩ to 100 kΩ range. For the example shown, R1 equals 2.5 kΩ and R2 equals 5 kΩ. From the equation above, the resultant reference voltage on the VREF pin is 1.5 V. This sets the input span to be 3 V p-p. To assure stability, place a 0.1 µF ceramic capacitor in parallel with R1.

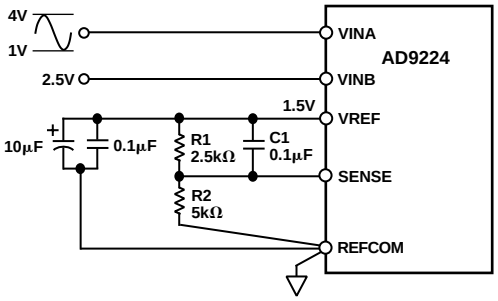

Figure 28. Resistor Programmable Reference—3 V p-p Input Span, V_{CM} = 2.5 V

The midscale voltage can be set to VREF by connecting VINB to VREF to provide an input span of 0 to 2 × VREF. Alternatively, the midscale voltage can be set to 2.5 V by connecting VINB to a low impedance 2.5 V source. For the example shown, the valid input single-ended range for VINA is 1 V to 4 V since VINB is set to an external, low impedance 2.5 V source. The VREF pin should be bypassed to the REFCOM pin with a 10 µF tantalum capacitor in parallel with a low inductance 0.1 µF ceramic capacitor.

USING AN EXTERNAL REFERENCE

Using an external reference may enhance the dc performance of the AD9224 by improving drift and accuracy. Figures 29 and 30 show examples of how to use an external reference with the A/D. Table III is a list of suitable voltage references from Analog Devices. To use an external reference, the user must disable the internal reference amplifier and drive the VREF pin. Connecting the SENSE pin to AVDD disables the internal reference amplifier.

Table III. Suitable Voltage References

	Output Voltage	Drift (ppm/°C)	Initial Accuracy % (max)	Operating Current
Internal	1.00	26	1.4	1 mA
AD589	1.235	10–100	1.2–2.8	50 µA
AD1580	1.225	50–100	0.08–0.8	50 µA
REF191	2.048	5–25	0.1–0.5	45 µA
Internal	2.0	26	1.4	1 mA

The AD9224 contains an internal reference buffer, A2 (see Figure 16), that simplifies the drive requirements of an external reference. The external reference must be able to drive about 5 kΩ (±20%) load. Note that the bandwidth of the reference buffer is deliberately left small to minimize the reference noise contribution. As a result, it is not possible to change the reference voltage rapidly in this mode.

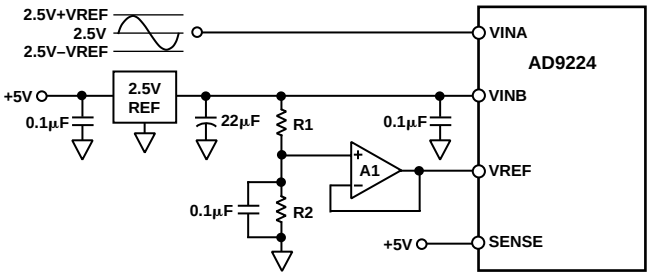

Figure 29. External Reference

Variable Input Span with V_{CM} = 2.5 V

Figure 29 shows an example of the AD9224 configured for an input span of 2 × VREF centered at 2.5 V. An external 2.5 V reference drives the VINB pin thus setting the common-mode voltage at 2.5 V. The input span can be independently set by a voltage divider consisting of R1 and R2 which generates the VREF signal. A1 buffers this resistor network and drives VREF. Choose this op amp based on accuracy requirements. It is essential that a minimum of a 10 µF capacitor in parallel with a 0.1 µF low inductance ceramic capacitor decouple the A1's output to ground.

Single-Ended Input with 0 to 2 × VREF Range

Figure 30 shows an example of an external reference driving both VINB and VREF. In this case, both the common-mode voltage and input span are directly dependent on the value of VREF. More specifically, the common-mode voltage is equal to VREF while the input span is equal to 2 × VREF. Thus, the valid input range extends from 0 to 2 × VREF. For example, if the REF191, a 2.048 V external reference was selected, the valid input range extends from 0 to 4.096 V. In this case, 1 LSB of the AD9224 corresponds to 1 mV. It is essential that a minimum of a 10 µF capacitor in parallel with a 0.1 µF low inductance ceramic capacitor decouple the reference output to ground.

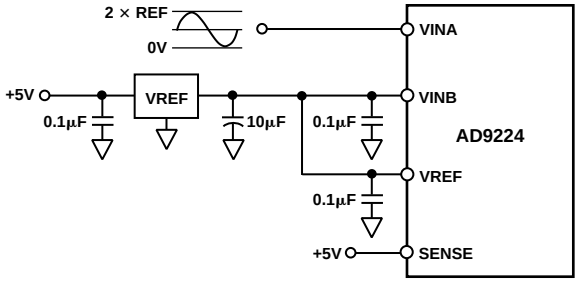

Figure 30. Input Range = 0 V to 2 × VREF

DIGITAL INPUTS AND OUTPUTS

Digital Outputs

The AD9224 output data is presented in positive true straight binary for all input ranges. Table IV indicates the output data formats for various input ranges regardless of the selected input range. A twos complement output data format can be created by inverting the MSB.

Table IV. Output Data Format

Input (V)	Condition (V)	Digital Output	OTR
VINA–VINB	< – VREF	0000 0000 0000	1
VINA–VINB	= – VREF	0000 0000 0000	0
VINA–VINB	= 0	1000 0000 0000	0
VINA–VINB	= + VREF – 1 LSB	1111 1111 1111	0
VINA–VINB	≥ + VREF	1111 1111 1111	1

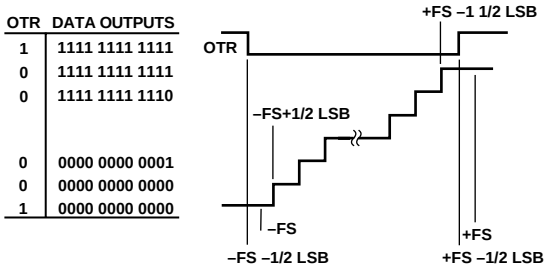

Figure 31. Output Data Format

Out of Range (OTR)

An out-of-range condition exists when the analog input voltage is beyond the input range of the converter. OTR is a digital output that is updated along with the data output corresponding to the particular sampled analog input voltage. Hence, OTR has the same pipeline delay (latency) as the digital data. It is LOW when the analog input voltage is within the analog input range. It is HIGH when the analog input voltage exceeds the input range as shown in Figure 31. OTR will remain HIGH until the analog input returns within the input range and another conversion is completed. By logical ANDing OTR with the MSB and its complement, overrange high or underrange low conditions can be detected. Table V is a truth table for the over/underrange circuit in Figure 32 which uses NAND gates. Systems requiring programmable gain conditioning of the AD9224 input signal can immediately detect an out-of-range condition, thus eliminating gain selection iterations. Also, OTR can be used for digital offset and gain calibration.

Table V. Out-of-Range Truth Table

OTR	MSB	Analog Input Is
0	0	In Range
0	1	In Range
1	0	Underrange
1	1	Overrange

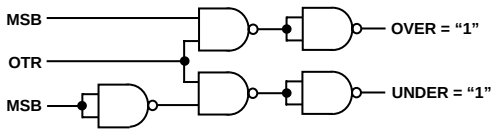

Figure 32. Overrange or Underrange Logic

Digital Output Driver Considerations (DRVDD)

The AD9224 output drivers can be configured to interface with +5 V or 3.3 V logic families by setting DRVDD to +5 V or 3.3 V respectively. The output drivers are sized to provide sufficient output current to drive a wide variety of logic families. However, large drive currents tend to cause glitches on the supplies and may affect SINAD performance. Applications requiring the ADC to drive large capacitive loads or large fanout may require additional decoupling capacitors on DRVDD. In extreme cases, external buffers or latches may be required.

Clock Input and Considerations

The AD9224 internal timing uses the two edges of the clock input to generate a variety of internal timing signals. The clock input must meet or exceed the minimum specified pulse width high and low (t_{CH} and t_{CL}) specifications for the given A/D as defined in the Switching Specifications at the beginning of the data sheet to meet the rated performance specifications. For example, the clock input to the AD9224 operating at 40 MSPS may have a duty cycle between 49% to 51% to meet this timing requirement since the minimum specified t_{CH} and t_{CL} is 12.37 ns. For low clock rates below 40 MSPS, the duty cycle may deviate from this range to the extent that both t_{CH} and t_{CL} are satisfied.

High speed high resolution A/Ds are sensitive to the quality of the clock input. The degradation in SNR at a given full-scale input frequency (f_{IN}) due only to aperture jitter (t_A) can be calculated with the following equation:

$$SNR = 20 \log_{10} [1/2 \pi f_{IN} t_A]$$

In the equation, the rms aperture jitter, t_A, represents the root-sum square of all the jitter sources, which include the clock input, analog input signal, and A/D aperture jitter specification. Undersampling applications are particularly sensitive to jitter.

Clock input should be treated as an analog signal in cases where aperture jitter may affect the dynamic range of the AD9224. Power supplies for clock drivers should be separated from the A/D output driver supplies to avoid modulating the clock signal with digital noise. Low jitter crystal controlled oscillators make the best clock sources. If the clock is generated from another type of source (by gating, dividing or other method), it should be retimed by the original clock at the last step.

The clock input is referred to the analog supply. Its logic threshold is AVDD/2. If the clock is being generated by 3 V logic, it will have to be level shifted into 5 V CMOS logic levels. This can also be accomplished by ac-coupling and level-shifting the clock signal.

The AD9224 has a very tight clock tolerance at 40 MHz. One way to minimize the tolerance of a 50% duty cycle clock is to divide down a clock of higher frequency, as shown in Figure 33.

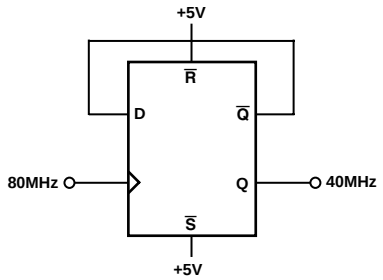

Figure 33. Divide-by-Two Clock Circuit

In this case an 80 MHz clock is divided by two to produce the 40 MHz clock input for the AD9224. In this configuration, the duty cycle of the 80 MHz clock is irrelevant.

The input circuitry for the CLOCK pin is designed to accommodate CMOS inputs. The quality of the logic input, particularly the rising edge, is critical in realizing the best possible jitter performance of the part: the faster the rising edge, the better the jitter performance.

As a result, careful selection of the logic family for the clock driver, as well as the fanout and capacitive load on the clock line, is important. Jitter-induced errors become more predominant at higher frequency, large amplitude inputs, where the input slew rate is greatest.

Most of the power dissipated by the AD9224 is from the analog power supplies. However, lower clock speeds will reduce digital current. Figure 34 shows the relationship between power and clock rate.

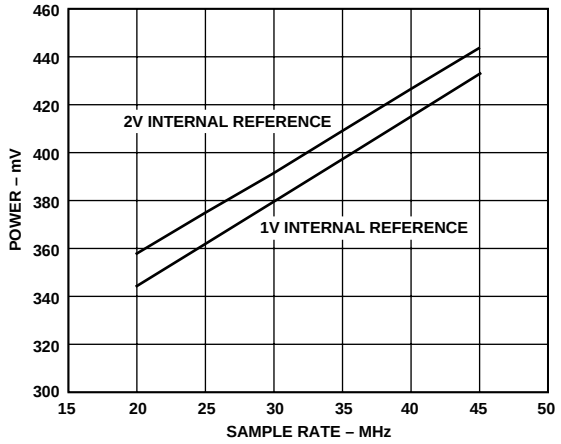

Figure 34. Power Consumption vs. Clock Rate

Direct IF Down Conversion Using the AD9224

Sampling IF signals above an ADC's baseband region (i.e., dc to $F_S/2$) is becoming increasingly popular in communication applications. This process is often referred to as Direct IF Down Conversion or Undersampling. There are several potential benefits in using the ADC to alias (or mix) down a narrowband or wideband IF signal. First and foremost is the elimination of a complete mixer stage with its associated baseband amplifiers and filters, reducing cost and power dissipation. Second is the ability to apply various DSP techniques to perform such functions as filtering, channel selection, quadrature demodulation, data reduction, detection, etc. A detailed discussion on using this technique in digital receivers can be found in Analog Devices Application Notes AN-301 and AN-302.

In Direct IF Down Conversion applications, one exploits the inherent sampling process of an ADC in which an IF signal lying outside the baseband region can be aliased back into the baseband region in a similar manner that a mixer will downconvert an IF signal. Similar to the mixer topology, an image rejection filter is required to limit other potential interfering signals from also aliasing back into the ADC's baseband region. A tradeoff exists between the complexity of this image rejection filter and the ADC's sample rate as well as dynamic range.

The AD9224 is well suited for various IF sampling applications. The AD9224's low distortion input SHA has a full-power bandwidth extending beyond 120 MHz, thus encompassing many popular IF frequencies. A DNL of ±0.7 LSB (typ) combined with low thermal input referred noise allows the AD9224 in the 2 V span to provide 69 dB of SNR for a baseband input sine wave. Also, its low aperture jitter of 4 ps rms ensures minimum SNR degradation at higher IF frequencies. In fact, the AD9224 is capable of still maintaining 64.5 dB of SNR at an IF of 71 MHz with a 2 V input span. Note, although the AD9224 can yield a 1 dB to 2 dB improvement in SNR when configured for the larger 4 V span, the 2 V span achieves the optimum full- scale distortion performance at these higher input frequencies. Also, the 2 V span reduces the performance requirements of the input driver circuitry (i.e., IP3) and thus may also be more attractive from a system implementation perspective.

Figure 35 shows a simplified schematic of the AD9224 configured in an IF sampling application. To reduce the complexity of the digital demodulator in many quadrature demodulation applications, the IF frequency and/or sample rate are strategically selected such that the bandlimited IF signal aliases back into the center of the ADC's baseband region (i.e., $F_S/4$). For example, if an IF signal centered at 45 MHz is sampled at 36 MSPS, an image of this IF signal will be aliased back to 9.0 MHz, which corresponds to one quarter of the sample rate (i.e., $F_S/4$). This demodulation technique typically reduces the complexity of the post digital demodulator ASIC which follows the ADC.

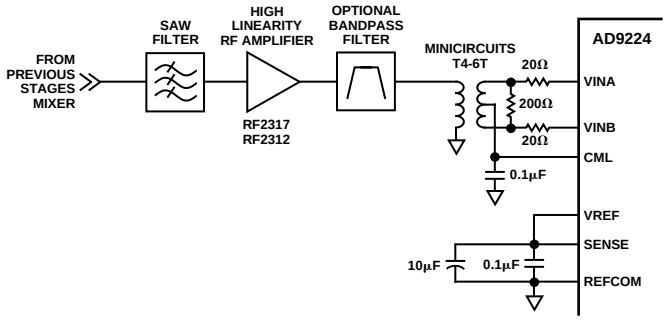

Figure 35. Example of AD9224 IF Sampling Circuit

To maximize its distortion performance, the AD9224 is configured in the differential mode with a 2 V span using a transformer. The center-tap of the transformer is biased at midsupply via the CML output of the AD9224. Preceding the AD9224 and transformer is an optional bandpass filter as well as a gain stage. A low Q passive bandpass filter can be inserted to reduce out-of-band distortion and noise which lies within the AD9224's 130 MHz bandwidth. A large gain stage(s) is often required to compensate for the high insertion losses of a SAW filter used for channel selection and image rejection. The gain stage will also provide adequate isolation for the SAW filter from the charge "kick back" currents associated with the AD9224's switched capacitor input stage.

The distortion and noise performance of an ADC at the given IF frequency is of particular concern when evaluating an ADC for a narrowband IF sampling application. Both single tone and dual tone SFDR vs. amplitude are very useful in assessing an ADC's dynamic and static nonlinearities. SNR vs. amplitude performance at the given IF is useful in assessing the ADC's noise performance and noise contribution due to aperture jitter. In any application, one is advised to test several units of the same device under the same conditions to evaluate the given applications sensitivity to that particular device.

Figures 36–39 combine the dual tone SFDR as well as single tone SFDR and SNR performances at IF frequencies of 35 MHz, 45 MHz, 71 MHz, and 85 MHz. Note, the SFDR vs. amplitude data is referenced to dBFS while the single tone SNR data is referenced to dBc. The performance characteristics in these figures are representative of the AD9224 without any preceding gain stage. The AD9224 was operated in the differential mode (via transformer) with a 2 V span and a sample rate between 28 MSPS and 36 MSPS. The analog supply (AVDD) and the digital supply (DRVDD) were set to +5 V and +3.3 V respectively.

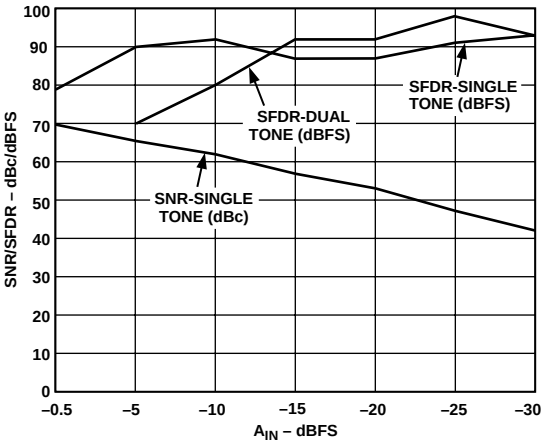

Figure 36. IF Undersampling at 35 MHz (F_1 = 34.64 MHz, F_2 = 35.43 MHz, f_{CLOCK} = 28 MSPS)

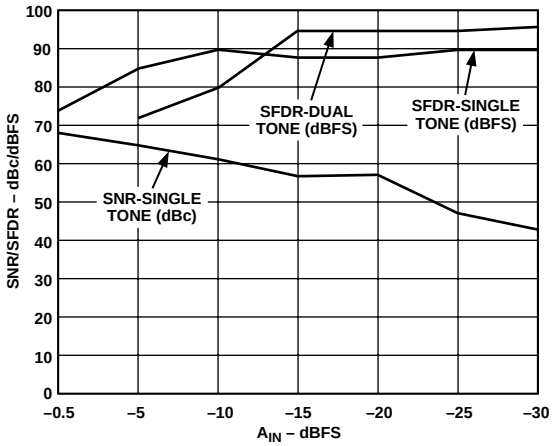

Figure 37. IF Undersampling at 45 MHz (F_1 = 44.53 MHz, F_2 = 45.55 MHz, f_{CLOCK} = 36 MSPS)

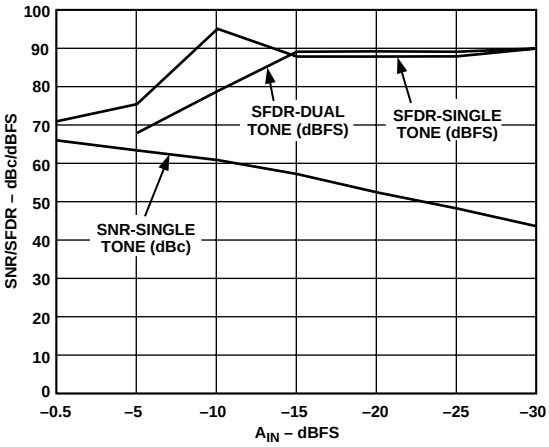

Figure 38. IF Undersampling at 70 MHz (F_1 = 70.46 MHz, F_2 = 71.36 MHz, f_{CLOCK} = 31.5 MSPS)

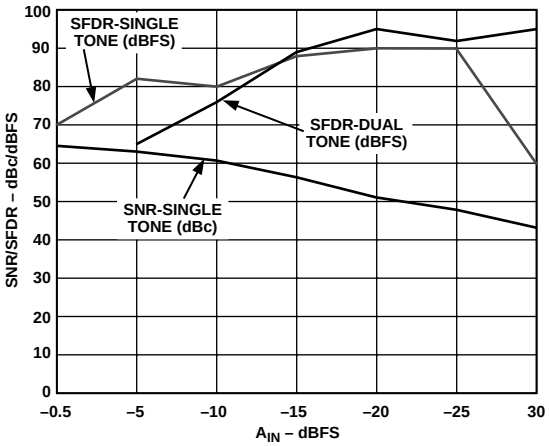

Figure 39. IF Undersampling at 85 MHz (F_1 = 84.46 MHz, F_2 = 85.36 MHz, f_{CLOCK} = 31 MSPS)

GROUNDING AND DECOUPLING

Analog and Digital Grounding

Proper grounding is essential in any high speed, high resolution system. Multilayer printed circuit boards (PCBs) are recommended to provide optimal grounding and power schemes. The use of ground and power planes offers distinct advantages:

1. The minimization of the loop area encompassed by a signal and its return path.
2. The minimization of the impedance associated with ground and power paths.
3. The inherent distributed capacitor formed by the power plane, PCB insulation and ground plane.

These characteristics result in both a reduction of electromagnetic interference (EMI) and an overall improvement in performance.

It is important to design a layout that prevents noise from coupling onto the input signal. Digital signals should not be run in parallel with input signal traces and should be routed away from the input circuitry. While the AD9224 features separate analog and driver ground pins, it should be treated as an analog component. The AVSS and DRVSS pins must be joined together directly under the AD9224. A solid ground plane under the A/D is acceptable if the power and ground return currents are carefully managed. Alternatively, the ground plane under the A/D may contain serrations to steer currents in predictable directions where cross coupling between analog and digital would otherwise be unavoidable. The AD9224/AD9225EB ground layout, shown in Figure 47, depicts the serrated type of arrangement.

The evaluation board is primarily built over a common ground plane. It has a "slit" to route currents near the clock driver. Figure 40 illustrates a general scheme of ground and power implementation in and around the AD9224.

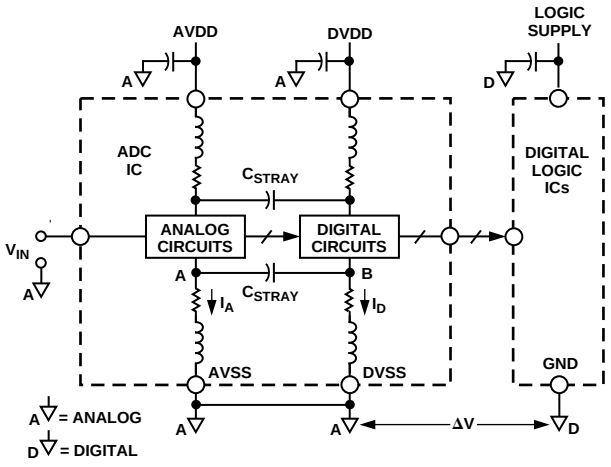

Figure 40. Ground and Power Consideration

Analog and Digital Driver Supply Decoupling

The AD9224 features separate analog and digital supply and ground pins, helping to minimize digital corruption of sensitive analog signals. In general, AVDD, the analog supply, should be decoupled to AVSS, the analog common, as close to the chip as physically possible. Figure 41 shows the recommended decoupling for the analog supplies; 0.1 µF ceramic chip and 10 µF tantalum capacitors should provide adequately low impedance over a wide frequency range. Note that the AVDD and AVSS pins are colocated on the AD9224 to simplify the layout of the decoupling capacitors and provide the shortest possible PCB trace lengths. The AD9224/AD9225EB power plane layout, shown in Figure 48 depicts a typical arrangement using a multilayer PCB.

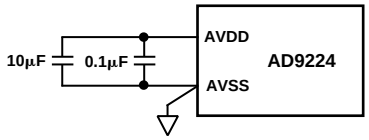

Figure 41. Analog Supply Decoupling

The CML is an internal analog bias point used internally by the AD9224. This pin must be decoupled with at least a 0.1 µF capacitor as shown in Figure 42. The dc level of CML is approximately AVDD/2. This voltage should be buffered if it is to be used for any external biasing.

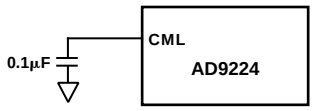

Figure 42. CML Decoupling

The digital activity on the AD9224 chip falls into two general categories: correction logic, and output drivers. The internal correction logic draws relatively small surges of current, mainly during the clock transitions. The output drivers draw large current impulses while the output bits are changing. The size and duration of these currents are a function of the load on the output bits: large capacitive loads are to be avoided. Note, the internal correction logic of the AD9224 is referenced to AVDD while the output drivers are referenced to DRVDD.

The decoupling shown in Figure 43, a 0.1 µF ceramic chip and 10 µF tantalum capacitors are appropriate for a reasonable capacitive load on the digital outputs (typically 20 pF on each pin). Applications involving greater digital loads should consider increasing the digital decoupling proportionally, and/or using external buffers/latches.

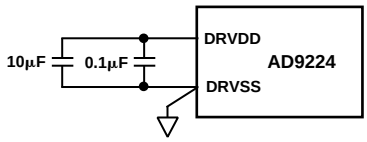

Figure 43. Digital Supply Decoupling

A complete decoupling scheme will also include large tantalum or electrolytic capacitors on the PCB to reduce low frequency ripple to negligible levels. Refer to the AD9224/AD9225EB schematic and layouts in Figures 44-50 for more information regarding the placement of decoupling capacitors.

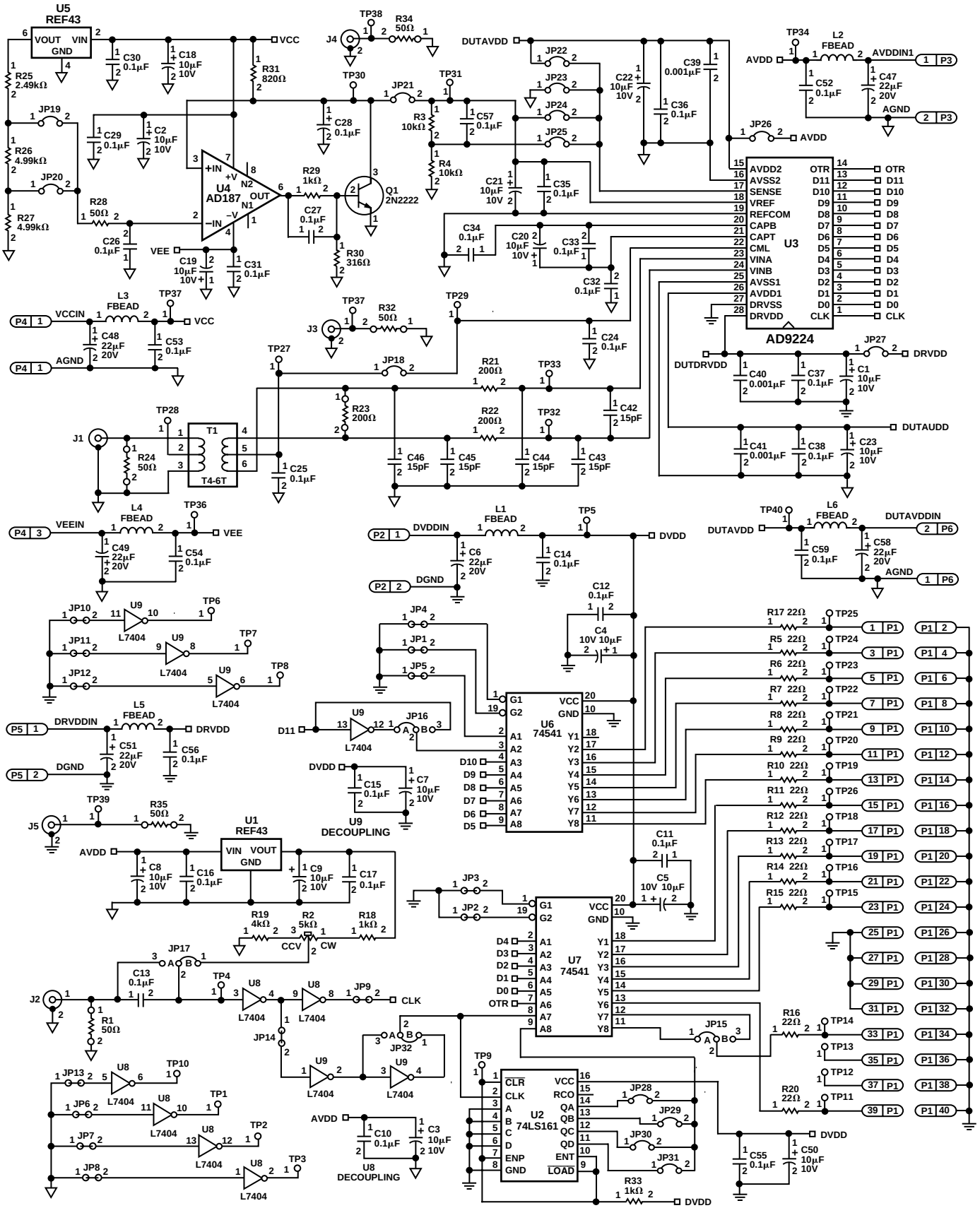

Figure 44. Evaluation Board Schematic

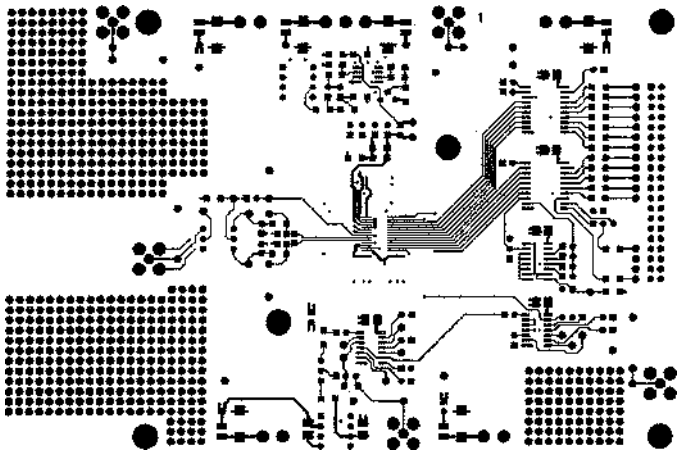

Figure 45. Evaluation Board Component Side Layout (Not to Scale)

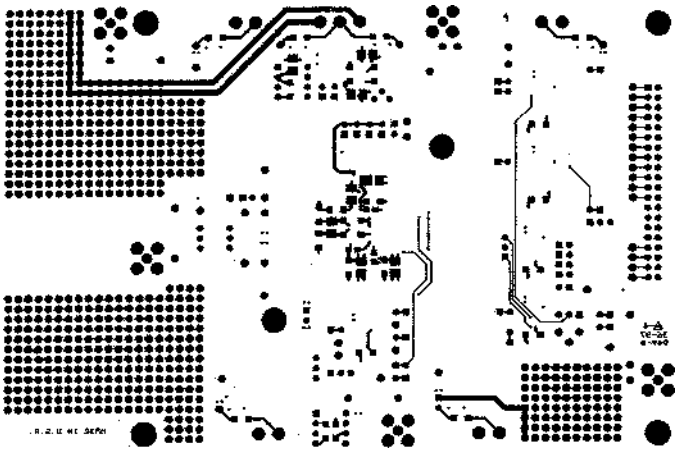

Figure 48. Evaluation Board Solder Side Layout (Not to Scale)

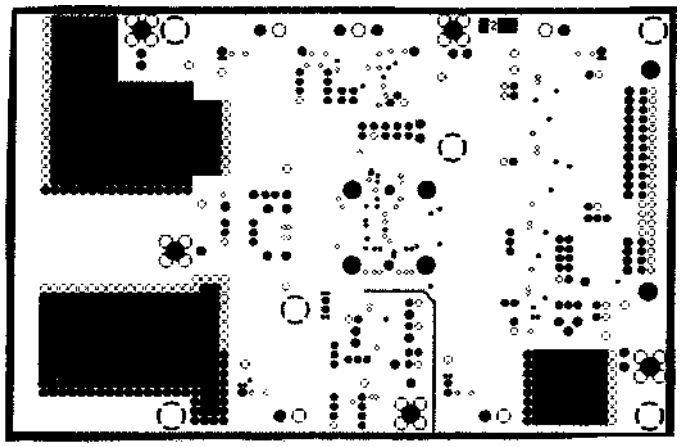

Figure 46. Evaluation Board Ground Plane Layout (Not to Scale)

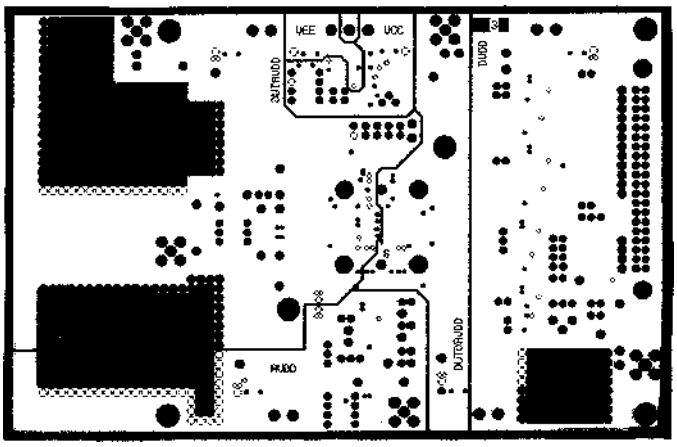

Figure 49. Evaluation Board Power Plane Layout

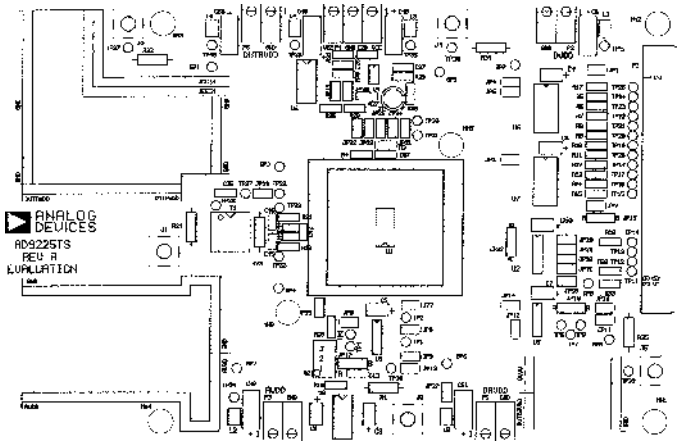

Figure 47. Evaluation Board Component Side Silkscreen (Not to Scale)

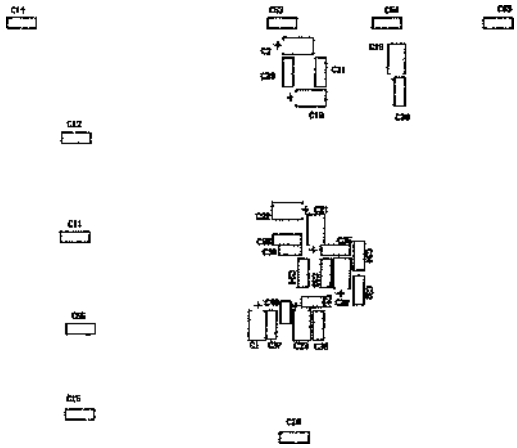

Figure 50. Evaluation Board Solder Side Silkscreen (Not to Scale)

OUTLINE DIMENSIONS

Dimensions shown in inches and (mm).

28-Lead Shrink Small Outline (SSOP) (RS-28)

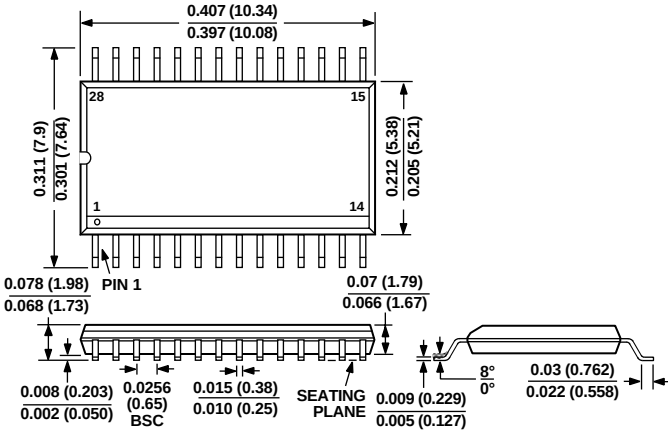

C3248a–0–1/99

PRINTED IN U.S.A.